FIRST LEVEL SCREENING – *WEEG 2015*

APPLICANT NAME: City of Quincy, Washington	**CONTROL NUMBER:** 106
APPLICANT LOCATION: Quincy, WA	**TASK AREA:** A (B) D
PROJECT NAME: Wastewater Treatment & Pipeline	**BOR $:** 1,000,000 **Cost Share $:** 3,500,000

	SCREENING FACTOR	COMPLETE	COMMENTS
1	Eligibility requirements		
	• Eligible applicant in a Reclamation state	✓YES __NO	
	• 50% or more non-Federal cost share	✓YES __NO	
	• Authorized funding amount ($1 Million total – no more than $500,000 a year)	✓YES __NO	$3 Million in EDA Funds
	• Funding Group I or II	__I ✓II	
	• Length of project (9/30/17 – FG I or 9/30/18 – FG II)	✓YES __NO	12/31/17
2	Proper format and length (75 pages)	✓YES __NO	
3	Proposal content		
	• SF-424 (authorized signature)	✓YES __NO	g-gov
	• SF-424B or SF-424D (authorized signature)	✓YES __NO	g-gov
	• Title page	✓YES __NO	
	• Table of contents	✓YES __NO	
	TECHNICAL PROPOSAL/EVALUATION CRITERIA (No More Than 50 Pages)		
	• Executive summary	✓YES __NO	
	• Background data	✓YES __NO	
	• Technical Project description	✓YES __NO	
	• Evaluation Criteria	✓YES __NO	
	• Project Benefits/Performance Measures	✓YES __NO	
	• Potential Environmental Impact Desc.	✓YES __NO	
	• Required Permits/Approvals, if applicable	✓YES __NO	will obtain
	• Letters of Project Support	✓YES __NO	
	• Official Resolution (Required 30 Days After)	✓YES __NO	
	PROJECT BUDGET		
	• Funding Plan	✓YES __NO	
	• Letters of Funding Commitment	✓YES __NO	
	• Budget Proposal	✓YES __NO	
	• Budget Narrative	✓YES __NO	
	• SF-424A or SF-424C	✓YES __NO	

1st Level Screening Comments (Screening Committee Member):

Summary Comments (Grants Officer):

Applicant is eligible for consideration during the Second Level Evaluation phase X **Yes** ____ **No**

Grants Officer _____ **Date** 1/28/15

*SF424- Cover Page

Project Title: Water Reclamation and Pipeline Project
Applicant: City of Quincy,
Address: PO Box 338, Quincy Washington 98848
Project Manager: Tim Snead, City Administrator
Contact Information: Email: tsnead@quincywashington.us
Phone: 509-787-3523 Fax: 509-787-1284

Funding Application for:
US Bureau of Reclamation
Funding Opportunity Announcement No. R15AS00002
WaterSMART:
Water and Energy Efficiency Grants for FY 2015

January 23, 2015

Table of Contents

SF-424 application cover page

SF-424 budget C form

SF-424 assurances D form

Technical proposal and evaluation criteria (limited to under 50 pages)

- Executive summary
- Background data
- Technical project description
- Evaluation criteria
- Performance measures

Environmental and cultural resources compliance

Required permits and approvals

Funding plan

Letters of project support

Official resolution

Project budget

Funding Plan and Letters of Commitment

- Budget proposal
- Budget narrative
- Budget Form SF-424C Form (included in application)
- Assurances SF-424D Form (included in application)

List of Attachments

- Technical Proposal
- EDA grant letter of commitment
- CERB grant letter of commitment
- PWTF loan letter of commitment
- Washington state appropriation grant letter of commitment
- City funds to date
- Official Resolution
- Sen. Murray support letter
- Sen. Cantwell support letter
- Con. Hastings support letter
- Quincy Rate Table

Technical proposal and evaluation criteria

The technical proposal and evaluation criteria (50 pages maximum) includes: (1) the executive summary, (2) background data, (3) technical project description, (4) evaluation criteria and (5) performance measures.

Executive summary

Date: January 23, 2015
Applicant name: City of Quincy, Grant County, Washington

One paragraph project summary:
The project proposed for funding will include the final concurrent phase(s) of a four phase wastewater reuse and pipeline project. Specific activities will include final design and construction of facilities to treat wastewater to allow for: groundwater recharge, water conservation, resale to new customers and an alternative discharge pipeline. This will allow the City of Quincy (City) to comply with the 2015 termination of the City's discharge agreement with the Bureau of Reclamation (Reclamation) and will remove the City's wastewater from a Reclamation Federal facility canal. Project funds will be used to accomplish final planning, design and/or construction activities. The project contributes to accomplishing the goals of this FOA by providing facilities that will help to create new water markets and energy supply, conserve existing water supply, provide energy efficiency improvements and groundwater recharge to provide up to 3,147 acre feet of alternative water supply annually (see Section III.B, "Eligible Projects").

Project length: 3 years
Completion date for the project: December 2017

Background data

The City faces an increasing set of water resource challenges including; inadequate infrastructure, customer growth, depletion of groundwater resources, impaired water quality, and water needed for customers and environmental uses. Inability to cost effectively meet customer demand and current water-use conflicts have become a local issue. As need for water resources grows- for crop irrigation, diversification of customers served and the environment- the need for low cost funding to support the City's efforts also grows. The project provides for the efficient use of water, integrating water and energy policies to support the sustainable use of all natural resources, and creating an alternative water supply to meet the City's needs.

The City's current agreement with Reclamation allows the City to discharge treated wastewater from the City's Industrial Wastewater Treatment Plant (IWTP) to a Reclamation wasteway, under a Washington State Department of Ecology (Ecology) National Pollutant Discharge Elimination System (NPDES) Waste Discharge Permit WA-002106-7. Wasteway operation and use is regulated by Reclamation, which has an NPDES exemption. To maintain the NPDES exemption, Reclamation's goal is to discontinue all non-agricultural discharges to its canal systems. The City's current agreement with Reclamation for the use of the wasteway for the IWTP discharge expires in September 2015 and, while Reclamation may allow a temporary extension while the City seeks funding, the long-term agreement will not be renewed.

In response to the impending expiration of the City's 50-year old agreement with Reclamation and projected customer water service requirements, among other concerns, the City completed an Engineering Feasibility Study for integrated multi-water utility improvements. The *City of Quincy Industrial Wastewater New Outfall Plan* (Outfall Plan) and the *Industrial Wastewater Treatment Plant Engineering Report* (Engineering Report) describe the City's proposed project to address these issues. The Outfall Plan recommended replacement of the NPDES outfall with a beneficial reuse system including industrial reuse, irrigation, and groundwater recharge. The result is a holistic, virtual closed-loop, regional solution that links the industrial and municipal wastewater treatment systems. The proposed solution addresses both the replacement of the NPDES outfall into the Reclamation canal and the issue of the Municipal Wastewater Treatment Facility (MWRF) unacceptably high groundwater total dissolved solids (TDS). Subsequent discussions with Reclamation have replaced the use of dry wells discussed in the Engineering Report with deeper aquifer recharge; the City is continuing discussions with Reclamation and is working to further develop this concept.

Recent ground water studies suggest the Columbia Basin groundwater supply is limited and could prove to be a costly and unreliable long-term alternative source of water supply for the City. The completion of the closed loop water cycle project will reduce demand for potable water, create an alternative water supply and market, and eliminate Reclamation discharge issues and Ecology's groundwater TDS concerns. The proposed facilities will increase revenues to the City and allow it to attract and retain industry to use the alternative water supply and increase the economic resources and livability of this small rural City.

The overall project includes 4 phases of engineering and construction activities to complete the City's integrated, innovative, virtual closed loop ('one water') system that will replace wastewater discharges with nearly 100% beneficial reuse:

Phase 1: Optimize the existing ion exchange system (located at the Industrial Reuse Wastewater Treatment Plant (IRWTP) and deeded to the City by Microsoft) and construct a pipeline linking industrial users on the west side of the City to the City's MWRF.

Phase 2: Extend industrial sewer lines and industrial reuse lines to data centers located on the east side of the City. Phase 2 is, in part, market driven based on industrial development in the eastern part of the City. Since the initial project was scoped, most of the industrial growth in Quincy has been on the west side of the City. ***Phase 2 has therefore been deferred until sufficient demand exists to justify construction of the additional pipelines.***

Phase 3: Construct the treatment system to produce industrial reuse quality water.

Phase 4: Extend the reuse water pipeline north of the City to provide irrigation water, and develop the long-term plan for aquifer recharge.

The City has already completed Phases 1 and a majority of Phase 3 of the project. Phase 2 is postponed and will not affect the results of the project described herein. The remaining concurrent tasks will modify the treatment system (phase 3) to serve its current and future customers and produce effluent that can be reused by industrial customers and recharged to the local aquifer instead of the Reclamation canal. A new irrigation water pipeline will also be constructed (phase 4) as part of the project. Portions of the project related to long-term aquifer recharge will be completed in the future following additional study and discussions with Reclamation, state agencies, and other stakeholders.

One of the City's larger customers deeded the City its $6 million ion exchange plant for conversion into a water softening and high-efficiency reverse osmosis (RO) facility to serve the needs of the City. This private-public partnership, combined with previous state and local capital investments, allows the City to fully leverage this significant private infrastructure investment and develop the treatment and water supply solution sought in

this funding request. This partnership also provides the City with low cost use of the customer's existing water rights. Other customers have built facilities and/or committed to provide on-going rate revenues for the project. New industry is planning to locate in the area contingent on the proposed alternative water supply and services being available. To move forward, the City must purchase and install additional facilities to provide reuse water to eliminate a major portion of industry wastewater from the sanitary sewer.

The concurrent final phase(s) of the project will include the following components:

1. Installation of filtration and softening systems to treat water for industrial reuse.
2. Installation of a RO system at Microsoft's former ion exchange plant, now owned by the City and termed the IRWTP.
3. Expansion of the City's MWRF percolation beds within the existing facility boundary.
4. Construction of a pumping station and pipeline to convey industrial reuse water and/or reclaimed water for irrigation or groundwater recharge.
5. Further development and construction of a system for groundwater recharge during periods of low demand for industrial reuse and irrigation water.
6. Further development of a system to capture and treat biogas produced by the City's IWTP for use as an alternative fuel.

A project map of the area showing the geographic location (include the State, county, and direction from nearest town) is shown on Figure 1. The locations of existing facilities where components of the project will be constructed are also shown.

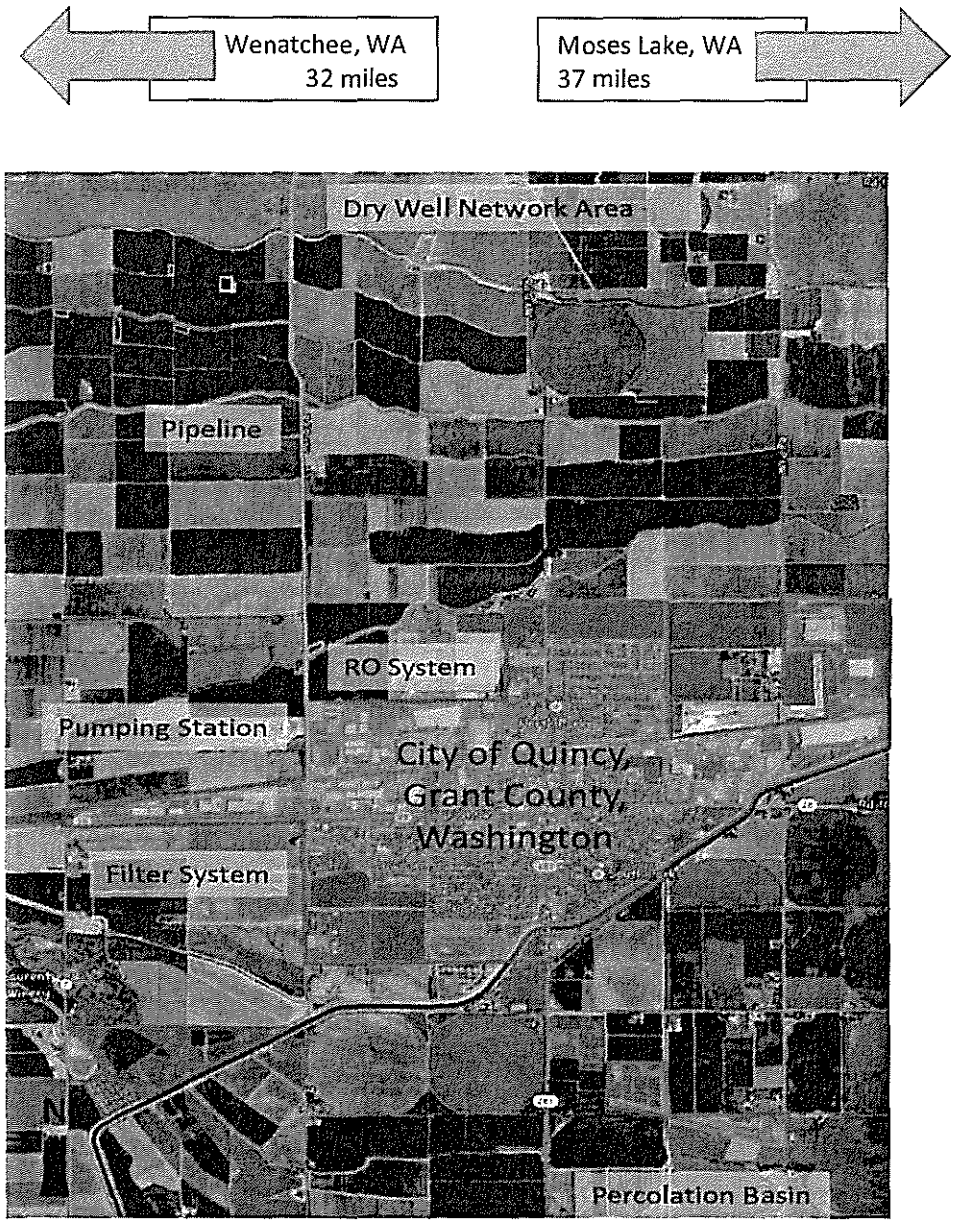

Figure 1. Project locations. City of Quincy, Grant County, Washington State

As applicable, describe the source of water supply, the water rights involved, current water uses (i.e., agricultural, municipal, domestic, or industrial), the number of water users served, and the current and projected water demand. Also, identify potential shortfalls in water supply. If water is primarily used for irrigation, describe major crops and total acres served. In addition, describe the applicant's water delivery system as appropriate. For agricultural systems, please include the miles of canals, miles of laterals, and existing irrigation improvements (i.e., type, miles, and acres). For municipal systems, please include the number of connections and/or number of water users served and any other relevant information describing the system. ***See below.***

The City's water supply is from groundwater, provided by five wells. The wells draw from two different management zones: a shallow zone and a deep zone. Wells are withdraw

points for multiple certificates. Certificated water rights are summarized in Table 1. All water rights are designated municipal / industrial.

Table 1. Certificated water rights.				
Control Number	Type	Priority Date	Qi (gpm)	Qa (ac-ft/yr)
335-D	Certificate	9/37	1,550	672
236-A	Certificate	2/6/47		
G3-00450C	Certificate	11/25/70		
G3-01273C	Certificate	5/2/68	6,320	5,716
G3-26025C	Certificate	7/27/78		
G3-27361C	Certificate	9/22/82		
946-D	Certificate	9/8/81		
Total Certificated Rights			7,870	6,388

Current water average water demand is 3,492,000 gallons per day (gpd), or 3,911 acre-feet/year. The maximum daily demand / average daily demand ratio is 2.0 (maximum daily demand of 6,984,000 gallons per day or 4,850 gallons per minute (gpm)), while the peak hour demand / maximum daily demand ratio is 1.6 (peak hour demand of 7,760 gpm). Average daily demand is projected to increase to 4,679,000 gpd by 2027, with maximum daily demand increasing to 11,161,000 gpd or 7,750 gpm and peak hour demand increasing to 12,400 gpm over the same period. Supply is provided from groundwater by five wells. The system has a supply capacity of approximately 12.7 million gpd (8,800 gallons per minute - includes fire suppression storage) and a total reservoir capacity of 3.1 million gallons distributed between four reservoirs. The City operates five booster stations. The transmission and distribution system includes approximately 171,600 lineal feet of piping, ranging in size from 4" to 16" in diameter. The City's municipal system includes 1,576 water connections and 17 reuse / reclaimed connections.

If the application includes renewable energy or energy efficiency elements, describe existing energy sources and current energy uses.
The project will include energy recovery and energy efficiency upgrades at the City's IWTP. Electrical power for the IWTP is supplied by the Grant County Public Utilities District. The proposed system will replace the existing IWTP aeration blowers with high-efficiency units. Additionally, new mechanical equipment (pumps, treatment equipment, etc.) will be installed with energy efficient motors. Energy savings is estimated at 900,000 kW-h/year.

The project will also recover natural gas from methane. The first treatment stage of the City's IWTP is a covered anaerobic pre-digestion lagoon. Treatment of nutrient-rich food processing wastewater discharged to the lagoon produces biogas, a mixture of methane (natural gas) and other constituents. Currently, biogas is burned off using a flare. As part of the proposed project, a treatment system will be installed to remove other constituents from the biogas and produce commercial fuel grade natural gas, which can be sold. The system will produce approximately 210 million cubic feet of gas per year.

Identify any past working relationships with Reclamation. This should include the date(s), description of prior relationships with Reclamation, and a description of the projects(s).

The City has more than 50 years of working successfully in collaboration with Reclamation. The project is required because the Reclamation Regional Office in Ephrata wants the City's treated wastewater out of the Reclamation canal when the agreement between the City and Reclamation expires. As described above, the City currently has a 50-year old agreement with Reclamation to allow the City to discharge treated wastewater from the City's IWTP to a Reclamation wasteway. Beginning in 2008, the City began planning for the 2015 replacement of the wasteway outfall. A preferred alternative for replacement of the outfall was recommended in the 2013 Engineering Report prepared for the City and provided to Reclamation. The proposed project is necessary to complete the Engineering Reports recommended alternative and replace the wasteway outfall with beneficial reuse facilities.

Wasteway operation and use is regulated by Reclamation, which has an NPDES exemption. To maintain that exemption, Reclamation's goal is to discontinue non-agricultural discharges to its canal systems. Reclamation's rationale is to eliminate non-agricultural discharges into the Columbia Basin Project system to reduce the potential loss of its current agricultural exemption under the federal Clean Water Act, which Congress is likely to consider for reauthorization in coming years. The City agreement with Reclamation for the use of the wasteway for the IWTP discharge expires in September 2015, and while Reclamation may grant a temporary extension to allow the City to complete its utility improvements, the long-term agreement will not be renewed.

Technical project description

The technical project description should describe the work in detail, including specific activities that will be accomplished as a result of this project. This description shall have sufficient detail to permit a comprehensive evaluation of the proposal.

The City of Quincy seeks to leverage its money and resources by cost sharing with Reclamation on its project that conserves and uses water more efficiently, increases the use of renewable energy and improves energy efficiency, facilitates water markets, and other activities to prevent any water-related crisis or conflict. Water conservation and efficiency is crucial to the City's plans to ensure that water is available to meet demands into the future.

The overall project includes 4 phases of engineering and construction activities to complete the City of Quincy's integrated, innovative, virtual closed loop ('one water') system that replaces wastewater discharges with beneficial reuse.

The City has completed Phase 1 construction to connect users on the west side to the utility and to the install associated piping and appurtenances. Phase 2 has been deferred until there is sufficient industrial demand to justify construction of the east side pipelines. The City has, or is, designing and constructing a portion of Phase 3 to convert and/or modify the City's wastewater treatment facilities to add filtration, water softening, pipelines and passive RO treatment to generate industrial reuse water for beneficial use, land application and groundwater recharge. The City has completed a design of the Phase 4 pipeline. This funding request will help finance the final two concurrent phases (Phases 3 and 4) of the project design and construction costs. The City is working with Reclamation to determine an appropriate discharge solution and that planning and negotiation effort is also part of the project. Environmental review, including an endangered species act evaluation and cultural resources review, is underway and will be completed before construction commences.

The final concurrent Phase(s) of the project will include the following components:

- Installation of the first treatment stage, a filtration system for filtration of IWTP effluent at the City's former IWTP primary clarifier facility. Filtration will make IWTP effluent suitable for industrial reuse, and will pretreat the effluent.
- Installation of the second treatment stage, a RO system at the City's existing IRWTP. The RO system will remove dissolved solids from filtered IWTP effluent, making the water suitable for irrigation or groundwater recharge.
- Construction of an irrigation pipeline to provide treated effluent to irrigators located north of the City.
- Installation of a biogas scrubber system to produce commercial fuel-grade natural gas from biogas resulting from anaerobic digestion of food processing wastewater.

A process flow diagram of the proposed system is shown in Figure 2:

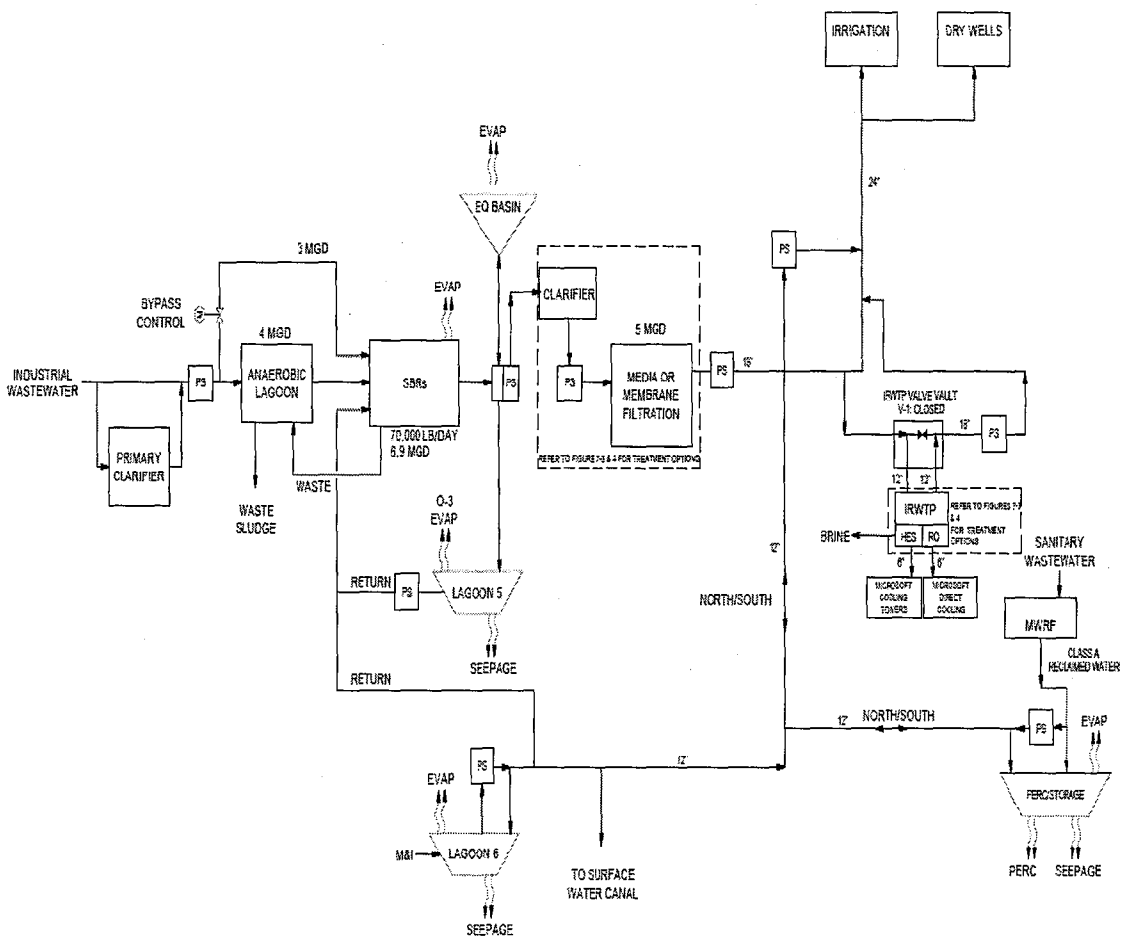

Figure 2. Process Flow Diagram

The project scope of work includes the following primary elements:

Task 1: Planning and Final Design

1. Equipment procurement.
2. Final design and bid period services, including preparation of a 60 percent design report, 90 percent design report, and bid drawing set and specifications package
3. Permitting and approval.
4. Services during bidding and award.
5. Public involvement.

Task 2: Construction

1. Installation of filtration and softening systems to treat water for industrial reuse.
2. Installation of a RO system, with a treatment capacity of approximately 1.5 million gallons per day of flow, will be procured and installed into an existing building and termed the IRWTP.
3. Expansion of the City's MWRF percolation beds within the existing facility boundary.
4. Construction of a pumping station and pipeline to convey industrial reuse water and/or reclaimed water for irrigation or groundwater recharge.
5. Further development and construction of a system of for groundwater recharge during periods of low demand for industrial reuse and irrigation water.
6. Construction of a filter system for filtration of secondary effluent from the IWTP will be installed at the former IWTP clarifier site.
7. Construction of an irrigation pipeline to provide treated reuse and reclaimed water.
8. Construction of a biogas recovery project at the IWTP.

Section V: Application Review Information

V.A Technical Proposal: Evaluation Criteria

The evaluation criteria portion of your application should thoroughly address each of the following criterion and subcriterion in the order presented to assist in the complete and accurate evaluation of your proposal. *Please note, if the work described in your application is a phase of a larger project, please only discuss the benefits that will result directly from the work discussed in your application and that is reflected in the budget, not the overall project.*

V.A.1 Evaluation Criterion A: Water Conservation (28 points)

Points will be allocated to give consideration to projects that are expected to result in significant water savings.

Subcriterion No. A.1: Quantifiable Water Savings

*Up to **24 points** may be allocated based on the quantifiable water savings expected as a result of the project.* Describe the amount of water saved. For projects that conserve water, please state the estimated amount of water expected to be conserved (in acre-feet per year) as a direct result of this project. Please provide sufficient detail supporting how the estimate was determined, including all supporting calculations. Please be sure to consider the questions associated with your project type (listed below) when determining the estimated water savings, along with the necessary support needed for a full review of your proposal (please note, the following is **not** an exclusive list of eligible project types. If your proposed project does not align with any of the projects listed below, please be sure to provide support for the estimated project benefits, including all supporting calculations and assumptions made). In addition, all applicants should be sure to address the following:

(1) What is the applicant's average annual acre-feet of water supply? ***See below.***
(2) Where is that water currently going (e.g., back to the stream, spilled at the end of the ditch, seeping into the ground, etc.)? ***See below.***
(3) Where will the conserved water go? ***See below.***

Please include a specific quantifiable water savings estimate; do not include a range of potential water savings.

The project will result in a quantifiable water savings by replacing City potable and private water rights used for industrial cooling, sourced from groundwater, with reclaimed water and industrial reuse water. Additionally, the project will result in quantifiable water conservation by treating and quantifiable groundwater recharge via percolation basins or aquifer recharge for a portion of the water currently discharged to the wasteway.

The project will conserve approximately 784 acre-feet/year of groundwater currently used for industrial cooling by replacing groundwater with reclaimed or reuse water. Additionally, the project will recharge 902 acre-feet/year of groundwater, and will make 1461 acre-feet/year available for irrigation. The total water reuse volume will be 3147 acre-feet/year.

Supporting water balance calculations are summarized in Table 2. Water balance calculations are fully documented in the *Industrial Wastewater Treatment Plant Engineering Report*, and have been updated in this application to reflect the current estimate of irrigated acreage for the project and the temporary extension of the wasteway surface discharge agreement.

Table 2. Water Balance Calculations (a).

Month	Water Source			Reuse				Surface Discharge (mgd)	Reuse and Discharge Total (mgd)
	Industrial Effluent (mgd)	Municipal Effluent (mgd)	Total (mgd)	Industrial Reuse (mgd)	Percolation Recharge (mgd)	Irrigation (490 acre basis) (mgd)	Reuse Total (mgd)		
January	1.45	0.95	2.40	0.47	1.50	0.00	1.97	0.43	2.40
February	1.57	0.95	2.52	0.58	1.50	0.00	2.08	0.43	2.52
March	1.87	0.97	2.84	0.70	1.50	0.64	2.84	0.00	2.84
April	1.16	1.09	2.25	0.70	0.00	1.55	2.25	0.00	2.25
May	1.82	1.15	2.96	0.82	0.00	2.15	2.96	0.00	2.96
June	2.08	1.18	3.25	0.82	0.00	2.44	3.26	0.00	3.25
July	2.75	1.19	3.93	0.93	0.00	3.00	3.94	0.00	3.93
August	2.76	1.18	3.94	0.93	0.00	3.00	3.94	0.00	3.94
September	2.72	0.97	3.69	0.70	1.00	2.00	3.70	0.00	3.69
October	1.87	1.28	3.15	0.70	1.16	0.86	2.72	0.43	3.15
November	1.45	1.07	2.51	0.58	1.50	0.00	2.08	0.43	2.51
December	1.40	1.00	2.40	0.47	1.50	0.00	1.97	0.43	2.40
Annual	696	394	1090	256	294	476	1025	65	1090

Total (mgal)									
Annual Total (acre-feet)	2136	1210	3346	784	902	1461	3147	201	3346

(a) The water balance assumes:

- Industrial and municipal plant influent and effluent flow rates as metered by the City and reported to the Department of Ecology.
- Average industrial usage of 0.7 million gallons per day (754 acre-feet/year), based on discussions with industrial water users.
- Demand for irrigation water for up to 490 acres, irrigating at an average rate of 3 feet per acre, based on discussions with area farmers and agronomic data for the area.

The water currently used for industrial cooling is primarily lost to evaporation. It is estimated based on industrial user water consumption and discharge records that 65% of water used for cooling is evaporated. Water not lost to evaporation is discharged via sewer to the City's MWRF, where it is treated and recharged to the shallow groundwater unit through percolation beds.

Water currently is discharged through Reclamation's wasteway system (DW237, W645W, and W645), eventually reaching the Potholes reservoir. The City understands that these canals are operated for the conveyance of agricultural runoff. The City does not have information on downstream users drawing from the wasteway system or Potholes Reservoir.

Conserved groundwater resulting from the replacement of potable or groundwater currently used for industrial cooling will remain in the aquifer, while conserved water resulting from elimination of the wasteway discharge will recharge groundwater supplies. In both cases, the conserved water will replenish groundwater supplies.

Future aspects of the project will include the elimination of the remaining winter surface water discharge. This discharge will require a temporary extension of the City's agreement with Reclamation for use of the wasteway. Elimination of the remaining surface discharge may result from the construction of storage facilities to store winter discharge for use during high-demand summer months, expansion of industrial reuse, or development of a long-term aquifer recharge system to supplement percolation.

Please address the following questions according to the type of project you propose for funding.

(1) **Canal Lining/Piping**: *Not applicable*
(2) **Municipal Metering**: *Not applicable*
(3) **Irrigation Flow Measurement**: *Not applicable*
(4) **SCADA and Automation**: *Not applicable*
(5) **Groundwater Recharge**: Groundwater recharge can provide savings when surface water storage evaporation is reduced and/or surface runoff is intercepted for recharge. Applicants proposing groundwater recharge projects should address the following:

(a) How have average annual water savings estimates been determined? ***See below***

(b) Describe the source of the water to be used for recharge and what percentage of the recharged water is going to be available for use and how it will be used. ***See below***

(c) If water savings are based on reduced surface water storage evaporation, provide calculations for reduced evaporation losses. ***See below***

(d) If water savings are based on recharge from existing surface runoff, provide calculations quantifying the estimated increased deep percolation amount. ***See below***

(e) How will actual water savings be verified upon completion of the project? ***See below***

Annual estimates for groundwater recharge have been projected based on available reclaimed and reuse water supply and projected demand. Supply estimates are based on historical effluent flow rates from the IWTP and MWRF, which are monitored continuously by the City and reported to Ecology on a monthly basis. Demand projections for industrial reuse are based on discussions with local industries, most notably Microsoft, which operates two data centers in the City, the Columbia Data Center and Project Oxford. Irrigation estimates are based on discussions with prospective irrigators regarding the amount of land that could be placed into production if water were available, and standard agricultural methods for calculating irrigation demand.

Recharge water volume for each month equals the water supply in a given month, minus the combined industrial and irrigation demand for reuse and reclaimed water during that month. Monthly volumes at the percolation beds are allocated to allow a five-month resting period at the beds (April-August) in order to maximize bed capacity.

Supporting water balance calculations are summarized in Table 2. Water balance calculations are fully documented in the Engineering Report, and have been updated in this application to reflect the current estimate of irrigated acreage for the project and the temporary extension of the wasteway surface discharge agreement.

Water used for recharge will be sourced from industrial and municipal wastewater, treated to comply with state standards for groundwater recharge, with additional treatment to reduce TDS to comply with antidegradation rules. The percentage of water available for use after recharge has not been determined, and will be evaluated based on hydrogeologic monitoring following implementation of the project. It is anticipated that groundwater recharge will offset groundwater losses resulting from the withdrawal of groundwater for area municipal, agricultural, and industrial uses. Water savings will be quantified through regular monitoring of groundwater levels following project completion.

(6) **Landscape Irrigation Measures:**

Initial industrial reuse volumes are projected based on demand for cooling water. However, the infrastructure will be in place and reuse water will be of a suitable quality to extend reuse to landscape irrigation at industrial facilities. Additionally, the City is examining

opportunities for irrigation of City facilities (parks, schools, etc.) using reclaimed water, facilitated by the proposed utility improvements.

(7) **High-Efficiency Indoor Appliances and Fixtures:** ***Not applicable***

(8) **Other Project Types Not Listed Above**: Projects to provide water savings for irrigation and municipal water systems other than those listed above will considered and evaluated based on the amount of estimated water savings and the adequacy of the description of how the savings are estimated. Applicants proposing these types of projects should address the following items:

(a) How have average annual water savings estimates been determined? This should include a detailed description of the rationale and methodologies used to develop the estimates. ***See below***

(b) If new technologies or devices are proposed, how will the savings occur? ***See below***

(c) How will actual water savings be verified upon completion of the project? ***See below***

A significant component of the project's water conservation results from the replacement of groundwater used for industrial cooling with reclaimed or reuse water. This results in water conservation by offsetting the withdrawal of groundwater based on municipal or industrial groundwater rights.

Demand projections for industrial reuse are based on discussions with local industries, most notably Microsoft, which operates the Columbia Data Center and recently constructed a second data center (known as 'Project Oxford') on 200 acres in the City. The company's new data center water use and demand has been factored into the City's water use projections, and will be accomplished with completion of Phase 3 (underway). Irrigation estimates are based on discussions with prospective irrigation users regarding the amount of land that could be placed into production if water were available, and standard agricultural methods for calculating irrigation demand. Data centers and irrigation customers will pay for their fair share of system improvements through capital contributions and/or user rates. Supply estimates are based on historical effluent flow rates from the IWTP and MWRF, which are monitored continuously by the City and reported to Ecology on a monthly basis.

Supporting water balance calculations are summarized in Table 2. Water balance calculations are fully documented in the *Engineering Report*, and have been updated in this application to reflect the current estimate of irrigated acreage for the project the City's negotiation with Reclamation on a temporary extension of the wasteway surface discharge agreement.

Water used for recharge will be sourced from industrial and municipal wastewater, treated to comply with state standards for groundwater recharge, with additional treatment to reduce TDS to comply with anti-degradation rules. The percentage of water available for use after recharge has not been determined, and will be evaluated based on hydro-geologic

monitoring following implementation of the project. It is anticipated that groundwater recharge will offset groundwater losses resulting from withdraw of groundwater for area municipal, agricultural, and industrial uses. Water savings will be quantified through regular monitoring of water consumption by industries.

Subcriterion No. A.2: Percentage of Total Supply (4 points)

Provide the percentage of total water supply conserved: Please use the following formula: Estimated Amount of Water Conserved / Average Annual Water Supply

The project will conserve a total of 3,147 acre-feet/year through the offset of groundwater supplies by replacing groundwater used for industrial cooling and irrigation with reuse or reclaimed water, and through increased groundwater recharge. The City's annual supply is 3,911 acre-feet/year. The estimated percentage of total supply conserved is: 3,147 acre-feet/year / 3,911 acre-feet/year = **80.47%**

V.A.2 Evaluation Criterion B: Energy-Water Nexus (16 points)

For projects that include construction or installation of renewable energy components, please respond to Subcriterion No. B.1: Implementing Renewable Energy Projects Related to Water Management and Delivery. If the project does not implement a renewable energy project but will increase energy efficiency, please respond to Subcriterion No. B.: Increasing Energy Efficiency in Water Management. If the project has separate components that will result in both implementing a renewable energy project and increasing energy efficiency, an applicant may respond to both.

Subcriterion No. B.1: Implementing Renewable Energy Projects Related to Water Management and Delivery

*Up to **16 points** may be awarded for projects that include construction or installation of renewable energy components.*

(1) Describe the amount of energy capacity.
(2) Describe the amount of energy generated.
(3) Describe any other benefits of the renewable energy project.

As part of the project, a biogas scrubber system will be installed at the IWTP. The first treatment stage at the IWTP is a covered anaerobic pre-digestion lagoon. The nutrient-rich food processing wastewater treated in the lagoon produces biogas, a mixture of methane (natural gas) and other constituents. Currently, the biogas is flared. The scrubber system will separate the methane from the other constituents to produce commercial fuel-quality natural gas that can be sold.

The estimated natural gas production is 400 standard cubic feet per minute (scfm), or 210 million cubic feet per year. Typical heating values for natural gas are 17,500-22,000 Btu/lb. At standard temperature and pressure, this corresponds to 184,000-231,000 MMBtu/year:

210 million scfm per year * 0.050 lb/sfcm = 10.5 million lb / year (5,250 tons/year)
10.5 million lb/year * 17,500 Btu/lb = 184,000 MMBtu/year
10.5 million lb/year * 22,000 Btu/lb = 231,000 MMBtu/year

1 kilowatt-hour equals 3,412 Btu. In terms of kilowatt hours per year, the project recovers 54-68 million kilowatt-hours/year of energy. The system's capacity will be approximately equal to the energy generated, but the system may be expanded if future wastewater flows increase, resulting in greater biogas production.

The primary environmental benefit of the system will be the replacement of fossil-fuel derived natural gas in the energy market with natural gas derived from renewable sources. Since the natural gas is already produced and is simply flared for disposal, burning this same volume of biogas-derived natural gas will not add to overall carbon emissions. Other beneficiaries of the renewable energy system will be natural gas customers, who will have a new source of renewable natural gas. The system requires only the current food processing wastewater, and does not add to the project's overall water needs.

AND/OR

Subcriterion No. B.2: Increasing Energy Efficiency in Water Management

Describe any energy efficiencies that are expected to result from implementation of the water conservation or water management project (e.g., reduced pumping).

The utility improvements will add powered equipment for pumping and water treatment. Process air typically accounts for over half the energy usage in wastewater treatment plants. The project will include the replacement of two existing inlet throttled, multistage centrifugal 600-hp aeration blowers at the IWTP, currently operated in a start-stop mode, with two 350-hp, adjustable speed turbo blowers, manufactured by Atlas-Copco. This will **result in considerable energy savings.**
Assuming each blower operates 25% of the time (2,190 hours per year):
Energy usage for existing blowers = 2 * 600 hp * 0.746 kW/hp * 2,190 hours/year = 2.0 million kilowatt-hours/year
Energy usage for upgraded blowers = 3 * 350 hp * 0.746 kW/hp * 2,190 hours/year = 1.1 million kilowatt-hours/year
Savings = 900,000 kilowatt-hours/year

While the new infrastructure does not require the replacement of existing equipment, energy efficient motors and other powered equipment will be used in new construction. In addition, variable frequency drives may be used with new pumping systems to reduce power consumption when peak flows are not required.

V.A.3 Evaluation Criterion C: Benefits to Endangered Species (12 points)

*Up to **12 points** may be awarded for projects that will benefit federally-recognized candidate species or up to **12 points** may be awarded for projects expected to accelerate the recovery of threatened or endangered species, or addressing designated critical habitat.*

The project is the first of its kind in in Washington State that uses industrial/municipal/ reclaimed/ground-water to replace surface disposal with reuse water to create a nearly zero discharge system and provide groundwater recharge. Water is currently discharged to the wasteway flows through Reclamations wasteway system, eventually reaching the Potholes reservoir. The project will remove the IWTP discharge from Reclamations waste-way,

contributing to Reclamations goal to remove all non-agricultural discharges from the Columbia Basin Irrigation Project System. This will also improve water quality in the Lower Crab Creek Reservoir, a 303d listed water body. The system will treat industrial effluent to remove TDS and percolate the treated effluent at the City's municipal percolation beds. Percolation of low-TDS water will counteract the trend of increasing groundwater TDS observed at the beds, improving groundwater quality. All of these efforts by the City project will serve to improve the threatened or endangered species (fish and wildlife) affected by the Reclamation wasteway discharge and the local habitat and/or water bodies described.

V.A.4 Evaluation Criterion D: Water Marketing (12 points)

This criterion is intended for the situation where an entity that is conserving water uses water marketing to make the conserved water available to meet other existing water supply needs or uses. **Briefly describe any water marketing elements included in the proposed project.** ***See below.*** Include the following elements:

(1) Estimated amount of water to be marketed

The project will establish a new water market by making available up to 3,147 acre-feet/year of water for industrial use, irrigation, and groundwater recharge.

(2) A detailed description of the mechanism through which water will be marketed

Water will be marketed through individual sales to industrial and agricultural users. Water not sold will be recharged through facilities, including percolation beds and a dry well network, constructed by the City. The City will also have a limited capacity for storage of water. Approximately 150 acre-feet of storage will be available initially. The City may eventually expand storage to up to 600 acre-feet if sufficient demand exists for water. However, because aquifer storage and recovery (ASR) is more cost effective than surface storage, the City's preferred approach is to develop ASR and expand reuse as storage comes online.

(3) Number of users, *types of water use, etc. in the water market

One initial industrial user is projected, consuming up to 784 acre-feet/year for use as cooling water. Industrial customers in the City include five data centers (with potential future expansion of this market segment), two major food processors, and numerous smaller fruit packing and food processing operations. These businesses are all current and potential future customers for reclaimed and industrial reuse water.

Initial demand for irrigation is projected to be 1461 acre-feet/year, sufficient to support 490 irrigated acres. Discussions with area farm operators indicate that there is sufficient interest in the irrigation water supply to consume this initial projection.

The City projects that up to 902 acre-feet/year will initially be recharged through percolation. Recharge will occur primarily during the winter and shoulder season months when demand for irrigation and industrial cooling water drops off. Some of this water may be shifted to industrial use or irrigation should the initial demands from these sectors increase.

(4) A description of any legal issues pertaining to water marketing (e.g., restrictions under Reclamation law or contracts, individual project authorities, or State water laws)

No legal issues impeding development of the water market have been identified.

(5) Estimated duration of the water market

It is assumed that the duration of the water market will be at least 20 years. Farming and food processing have been long established industries in the Quincy area, and demands for water from these industries are expected to continue. The City has had many data centers recently build facilities in the community that desire and have agreed to purchase the alternative water provided from the project to lower the cost of their cooling systems. Microsoft, the largest data center customer in the area, built a second facility, the company's largest global data center, in Quincy this year and is likely to remain a customer for the long term. The City is negotiating a public-private partnership project to bring a food waste composting facility to Quincy. The facility will beneficially reuse a portion of the solid waste byproducts from the RO system and will be a long term user of the project water. It is also reasonably certain that a market for irrigation water will exist and absorb any reduction in the market for industrial cooling water. Additionally, the City will operate groundwater recharge systems that function as a "safety valve" if the supply of water exceeds demand. These systems will beneficially reuse water not allocated through the water market.

V.A.5 Evaluation Criterion E: Other Contributions to Water Supply Sustainability (14 points)

*This criterion is intended to provide an opportunity for the applicant to explain 1) how the project relates to a completed **WaterSMART Basin Study**; 2) how the project could expedite future **on-farm improvements**; 3) how the project will **build resiliency to drought**; and/or 4) how the project will provide **other benefits to water supply sustainability** within the basin.*

Subcriterion E.1: Addressing Adaptation Strategies in a WaterSMART Basin Study

Not applicable

Subcriterion E.2: Expediting Future On-Farm Irrigation Improvements

(1) Describe in detail the on-farm improvements that can be made as a result of this project. Include discussion of any planned or ongoing efforts by farmers/ranchers that receive water from the applicant.

The project will allow irrigation on approximately 490 acres north of the City that are not currently farmed. If sufficient demand exists, up to 2,563 acre-feet per year can be provided (the total reuse volume minus the estimated industrial reuse demand). Assuming irrigation at 3 feet per year, this will support up to 850 acres. This is contingent on sufficient storage being available to store treated effluent produced during the winter months.

(2) Provide a detailed explanation of how the proposed WaterSMART Grant project would help to expedite such on-farm efficiency improvements.

The project will provide an alternative source of irrigation water to expedite efficiency improvements and provide the impetus for farmers to build on-farm facilities to receive and distribute the water.

(3) Fully describe the on-farm water conservation or water use efficiency benefits that would result from the enabled on-farm component of this project.

To receive irrigation water from the project, farmers would be responsible for construction of improvements to convey water from the end of the City's irrigation pipeline to and within individual properties.

(4) Projects that include significant on-farm irrigation improvements should demonstrate the eligibility, commitment, and number or percentage of shareholders who plan to participate in any available NRCS funding programs.

Initial demand for irrigation is projected to be 1461 acre-feet/year, sufficient to support 490 irrigated acres. Discussions with area farm operators indicate that there is sufficient interest in the irrigation water supply to consume the full amount. Recharge will occur primarily during the winter and shoulder season months when demand for irrigation and industrial cooling water drops off. Some of this water may be shifted to industrial use or irrigation should the initial demands from these sectors increase.

Subcriterion E.3: Building Drought Resiliency

If the proposed project will make water available to alleviate water supply shortages resulting from drought, please address the following: Explain in detail the existing or recent drought conditions in the project area.

Recent groundwater studies by the U.S. Geological Survey and Columbia Basin Ground Water Management Area suggest the Columbia Basin groundwater supply is limited and could prove to be a costly and unreliable long-term alternative source of water supply for the City. The project will specifically address this concern through water conservation, resale and groundwater recharge.

Subcriterion E.4: Other Water Supply Sustainability Benefits

Projects may receive up to 10 points under this sub-criterion by thoroughly explaining additional project benefits, *not already described above*. Please provide sufficient explanation of the additional expected project benefits and their significance. Additional project benefits may include, but are not limited to, the following:

(1) Will the project make water available to address a specific concern? For example: Will the project directly address a heightened competition for finite water supplies and over-allocation (e.g., population growth)?

Yes. Industrial users in the area consume significant amounts of potable and groundwater for industrial processing and cooling. Recent groundwater studies by the U.S. Geological Survey and Columbia Basin Ground Water Management Area suggest the Columbia Basin groundwater supply is limited and could prove to be a costly and unreliable long-term alternative source of water supply for the City. The project will specifically address this concern through water reuse, conservation, resale and groundwater recharge.

(2) Will the project help to address an issue that could potentially result in an interruption to the water supply if unresolved?

Yes. If an alternative to the Reclamation wasteway discharge is not constructed prior to the 2015 expiration of the discharge agreement with Reclamation and a temporary extension is not in place, the industrial customers that support the town, may be required to shut down operations and possibly be forced to relocate. Industrial effluent is required as part of the City's agreement to provide recycled water to local data centers. The City would be in non-compliance with its customer agreements and low to moderate income residents will be unable to support the resulting systems costs which could potentially bankrupt the town. The project will address that issue and stop any interruption to the customer supply.

(3) Will the project make additional water available for Indian tribes? **Potentially.**

(4) Will the project make water available for rural or economically disadvantaged communities?

Yes. The City is recognized by Housing and Urban Development (HUD) as a low to moderate income (LMI) community. More recently, the City has completed a local income survey of the customer base to confirm that it is currently a LMI community. The project is for the benefit of the entire community, including the largely Hispanic community (74.3%), that has a double digit unemployment rate over the past five years.

(5) Does the project promote and encourage collaboration among parties?

Yes. The project has collaborated with local officials, staff, customers, Grant County, Quincy Valley Leadership Group (*12th & 13th District state legislators, Grant Co. BOCC, Quincy Chamber of Commerce, Grant Co. Health Department, Port District, Hospital District, School District and others*), local stakeholders and state agencies. The City has received positive feedback from regulatory agencies encouraging groundwater recharge and industrial water reuse, and supporting the City's environmentally innovative water reuse project and water quality solution.

Project stakeholders and the community were included in decision making. Current and potential industrial customers have been included in the planning and construction of facilities that benefit or affect their operations. The City has gained support from private industry to provide facilities and funding for a portion of the needed facilities. Microsoft and the City negotiated a transfer of its $6 million treatment facility to accomplish the project. The company is also investing several million dollars to construct its own local distribution facilities to serve its Project Oxford. This private-public partnership, combined with previous state and local infrastructure and planning capital investments and dedicated City revenues, allows the City to fully leverage this significant private infrastructure investment and develop the project. To move forward, the City must purchase and install additional facilities to provide reuse water for Microsoft and other committed customers. Other customers have agreed to pay rates and make financial contributions related to the project and on-going operations of the wastewater system. The City is also in the process of developing a public-private partnership project to bring a food waste composting facility to Quincy. The facility will beneficially reuse a portion of the solid waste byproducts from the RO system to offset system costs for the City.

The City Council has approved historic rate increases and authorized a rate study in July 2013 to evaluate the projects financial impacts and needed revenues from its customers.

Stakeholders were involved in the rate consultant selection process and will continue to be included in the decision making process. City officials and customers have supported rate increases to fund utility operation and build reserves initiate this project and complete projects on schedule that are required to serve customers. The City Council has also authorized the City to apply for low cost funding, hired a lobbyist and has entered into grant and loan contracts with the state and federal government agencies committing local funds. Since 2007, the City has secured significant federal, state and local financial support for the overall wastewater project (phases 1-3) totaling approximately $19 million. The City hired a lobbyist to promote support for the project at the state and national legislative level. To secure project funding, Mayor Hemberry led the City's delegation in numerous meetings with state legislators and agency executive management in Olympia, and with federal congressional leaders and agency officials in Washington, D.C. Project funding supporters include the Community Economic Revitalization Board, US Economic Development Administration, Public Works Trust Fund, state legislative budget grants, and local utility customer (via rates and charges).

The City has attempted to negotiate with Reclamation to extend the existing agreement and continue to discharge into the waste-way and while Reclamation may allow a temporary extension the agreement will not be renewed long-term. In collaboration with Reclamation, the City is planning a study to develop a groundwater recharge system. The recharge system will allow any excess treated effluent not used for industrial reuse or irrigation to be recharged to the aquifer, providing a long term solution to the City's wastewater management. The City has contacted the local tribes as a part of its Rural Development and EDA grant application processes and has no opposition to the project expressed by local tribes. The City has involved farmers in discussions on selling reclaimed water for irrigation once the pipeline is in place and reclaimed water is available. Farmers are supportive and the City will sell reuse water for irrigation if it will result in revenues to offset City costs and not adversely increase the cost to other customers.

(6) Is there widespread support for the project? **Yes.** ***See (4) above for details on collaboration and support***

(7) What is the significance of the collaboration/support?

The support is significant because it assures 1) the City will have customers to purchase the alternative water supply once it's available, 2) the community and stakeholders will continue to have service and be able to move forward with planned services, investments and expansions, 3) regulatory and environmental concerns will be resolved to satisfy those agencies, and 4) that the City will be able to construct and fund facilities to provide for a contracted water reuse supply and build an alternative discharge system to adhere to Reclamation's requirement. This collaboration will also allow the City to attract new potential customers (industrial, commercial, residential) to this area of the state, increasing private sector investment and employment opportunities in this low income community with double digit unemployment.

(8) Will the project help to prevent a water-related crisis or conflict?

Yes. If an alternative discharge facility and facilities to provide an adequate level of treatment are not constructed when the Reclamation agreement expires and a temporary

extension of the wasteway discharge agreement is not in place, the City will have an enormous volume of water daily to discharge, creating a major crisis that will negatively affect the entire community. The City would not be able to provide service to industries who would have to cease operation and/or move out of the area. This would eliminate most of the jobs in the community and the City would not be in compliance with its agreements with local industry and local ratepayers would be required to pay astronomical bills to fund the industries share of water and wastewater costs. Failure to complete this project could shut down the City.

A declining groundwater table threatens the future of the Columbia Basin. Water rights in this area are a source of conflict and having an alternative City managed water supply and access to the Microsoft facility water rights will help prevent further water right conflicts and reduce the potential for a water supply crisis. Purchasing potable water to serve large scale industrial cooling tower operations is not sustainable and would prove costly over the long-term. To retain those and other customers in the area that help support community operations, the City needs to complete this utility project by the extended Reclamation deadline. As described in this application, groundwater recharge is an important tool for the City to use to improve water quality and help replenish the groundwater and avoid an impending water supply crisis.

(9) Is there frequently tension or litigation over water in the basin?

Yes. The City of Quincy resides in the state designated Quincy Ground Water Subarea, established in 1973, which set forth rules for the administration of all ground waters within the subarea, including among others, commingled public ground waters and artificially stored ground waters from Reclamation's Columbia Basin Project (CBP) which provides river water for irrigation. Shallow ground water (200 feet below surface) is managed as CBP water. Relatively small amounts of public waters (in the range of not more than 4,000 acre–feet annually) are available for appropriation in the shallow unit. Such small amounts are reserved for withdrawal for domestic and group domestic uses. Withdrawals of public waters of the deeper ground water management unit are controlled by state issued permits. However, historical tension over the use and access to water exists among land owners who are CBP participants and the land owners utilizing deep and shallow ground water resources. This project will help reduce that tension by 1) providing a new source of irrigation water for purchase, 2) decreasing demand on ground water resources from municipal and industrial permit holders, and 3) increasing ground water supply through aquifer recharge and storage.

There is currently tension over the expiration of the Reclamation agreement and securing adequate low cost funding to finance the solution to that problem without crippling ratepayers and local industry.

(10) Is the possibility of future water conservation improvements by other water users enhanced by completion of this project? **Yes.**

(11) Will the project increase awareness of water and/or energy conservation and efficiency efforts? **Yes**

(12) Will the project serve as an example of water and/or energy conservation and efficiency within a community?

Yes. The City of Quincy will certainly use the project as an example of water efficiency and sustainability. It's relevant to note the City has entered into a private-public partnership with American Waters, Inc., to conduct a pilot project for the recovery of methane gas from the City's industrial treatment lagoons. Initial results demonstrate the facility can generate a viable commercial grade product for reuse and/or resale. As rates for service increase with the repayment of the loans for this project, it is common for customers billed based on usage to implement conservation and efficiency efforts to attempt to decrease their costs.

(13) Will the project increase the capability of future water conservation or energy efficiency efforts for use by others?

Yes. New industrial customers will be able to use reuse water to conserve the use of costly and scarce potable water for their operations.

(14) Does the project integrate water and energy components?

Yes. New facilities constructed for water reuse will be built with energy efficient technology where possible.

V.A.6 Evaluation Criterion F: Implementation and Results (10 points)

Subcriterion No. F.1: Project Planning

Does the project have a Water Conservation Plan, System Optimization Review (SOR), and/or district or geographic area drought contingency plans in place? Does the project relate/have a nexus to an adaptation strategy developed as part of a WaterSMART Basin Study)? ***Not applicable.***

Provide the following information regarding project planning:

(1) Identify any district-wide, or system-wide, planning that provides support for the proposed project.

Two documents, the *City of Quincy Industrial Wastewater New Outfall Plan* (Outfall Plan) and the *Industrial Wastewater Treatment Plant Engineering Report (*Engineering Report*)*, describe the City's proposed project and rank it as the highest priority project in the City.

(2) Describe how the project conforms to and meets the goals of any applicable planning efforts, and identify any aspect of the project that implements a feature of an existing water plan(s).

The Outfall Plan compiled the planning work efforts prior to 2013 and recommended replacement of the NPDES outfall with a beneficial reuse system including industrial reuse, irrigation, and groundwater recharge through percolation and dry wells. The Engineering Report further refined the planning basis flows presented in the Outfall Plan, evaluated a range of sizing options for each of the beneficial reuse components based on lifecycle costs, and selected a recommended alternative. The project is recommended in the plans described above and meets the goals of those planning efforts and customer contract agreements.

The Engineering Report that describes the project and integrates solutions to the challenges facing each of the City's water utilities and specifically details and identifies this project, reviews alternatives, costs and local impacts. The community was notified and invited to attend a public City council meeting on the Engineering Report and State Environmental Review Process (SEPA) held on November 19, 2013, and did not oppose the City's efforts. Environmental review has been completed on phases of the project already constructed. Phase 3 and 4 environmental review, including endangered species act analysis and cultural resources review, is in progress. Environmental review will be completed before construction is initiated and is not expected to be a critical-path item in the overall project schedule. As part of the overall project the City has completed design and construction of Phase 1 to connect reclaimed water pipelines of the IWRTP project. Several overall project components were recognized as required infrastructure early in the planning process, and have either already been constructed or are currently under construction. These include pipelines for the conveyance of reclaimed water from the MWRF and industrial effluent from the IWTP within the City boundaries, and construction of the structural building shell that will house the filtration system. These projects were completed on time and within budget. In 2012, the City began the design for Phase 3 and completed design for the treatment backbone and Microsoft industrial reuse components of Phase 3. Concurrent final designs of Phase 3 and the Phase 4 pipeline facility is included in this funding request. The City has already completed a design of the Phase 4 pipeline and has submitted documents to Ecology for review and approval.

Subcriterion No. F.2: Readiness to Proceed

Describe the implementation plan of the proposed project. Please include an estimated project schedule that shows the stages and duration of the proposed work, including major tasks, milestones, and dates.

The following steps have been taken and the project is ready to proceed immediately.

- Phase 1 of the project is complete. Phase 2 has been deferred until sufficient demand exists to extend the industrial sewer to the east side of the City.
- A portion of the Phase 3 design is complete, in-progress and/or under construction. The Phase 4 pipeline design is complete. These efforts will optimize the City's ability to keep the project on schedule to meet the extended Reclamation deadline.
- No groundbreaking activities have taken place for the project components related to this funding request.
- Committed phase 3 and 4 project funding: Secured $700,000 state grant, $300,000 PWTF design loan, $3 million EDA construction grant, $1 million CERB grant, $1.5 million local funds, applied for the PWTF to provide a $7 million 2015 construction loan and made the preliminary offer list but the final offer list is still pending legislative approval. The City is also pursuing a $2 million state capital budget request, a 2015/16 CERB request, and potential state loans. Microsoft provided a $6 million facility.
- No easements, inter-local or landowner agreements required for construction of facilities. The City is discussing irrigation water use with potential irrigators, and will finalize a water services agreement once the phase 4 pipeline begins construction.
- Local qualified staffing is in place.
- The City has retained and contracted with Consulting Engineering firms to complete the work.

Please explain any permits that will be required, along with the process for obtaining such permits.

Permits and Cultural Resource Assessment will be finished with the design. Applicable permits include the following:

- Modification of the existing MWRF State Waste Discharge Permit to include the expanded percolation beds and recharge water from the IRWTP.
- Pretreatment permit authorizing the discharge of water from the IRWTP to the MWRF.
- A new State Waste Discharge Permit for the IWTP, replacing the existing NPDES permit.
- Permit conditions for the new IWTP permit addressing industrial and irrigation uses of industrial reuse water.
- The City will apply to the Washington State Department of Ecology for the modification to the existing MWRF State Waste Discharge Permit and the new IWTP State Waste Discharge Permit. The City was delegated pretreatment permitting authority by the Department of Ecology in 2012, and will be responsible for issuing and administering the IRWTP pretreatment permit.

The Phase 3 and Phase 4 pipeline project schedule is shown on Table 3.

Table 3. Project Schedule

Cost	Previous	2015	2016	2017	Total
Complete Phase 3	$4,000,000	$5,000,000	$1,000,000		$10,000,000
Phase 4 Pipeline		$500,000	$4,000,000		$4,500,000
Total	$4,000,000	$5,500,000	$5,000,000		$14,500,000

Subcriterion No. F.3: Performance Measures

Actual benefits are defined as water actually conserved, marketed, or better managed, as a direct result of the project. Provide a brief summary describing the performance measure that will be used to quantify actual benefits upon completion of the project (e.g., water saved, marketed, or better managed, or energy saved).

Performance Measure Summary:
Overall Performance: The project will install a RO treatment system, with a capacity of approximately 1.5 million gallons per day of flow and build an alternative discharge pipeline. Success of the project will be measured by its completion on schedule and within budget, as well as its ability to:

- Produce alternative water supplies for industrial use. This will be measured by metering the volume of IWTP effluent-based industrial reuse water used by industrial customers.
- Produce alternative water supplies for irrigation. This will be measured by metering the volume of IWTP-effluent based reuse water and Class A reclaimed water used for irrigation.
- Conserve groundwater-based potable water supplies. This will be measured by metering the usage from the City's groundwater supply wells and comparing usage before and after the project.

- Recharge groundwater. This will be measured by metering the volume of water recharged through the expanded percolation beds and, eventually, the aquifer recharge system. Performance of these facilities will also be measured through periodic water level measurements and samples from groundwater monitoring wells.
- Provide energy savings. This will be measured by monitoring the volume of gas produced and sold as a result of the biogas system. Energy savings resulting from the installation of high-efficiency blowers at the IWTP will be measured by comparing electrical usage at the IWTP before and after the project.
- Increase system capacity. This will be measured by tracking new industrial customers that use the IWTP for wastewater treatment.
- Provide the water quality/environmental benefits. This will be measured through the reduction in pollutant loads, including biochemical oxygen demand, suspended solids, and dissolved solids, discharged to the wasteway or to the City's existing percolation beds.

Water Sales/Savings: Following startup of the system described, project benefits will be quantified by directly metering the volumes of water sold to industrial users and to irrigation users, as well as the volumes recharged to groundwater through percolation beds or the well network. This will enable the City to accurately track the volume of water that offsets groundwater supplies formerly used for industrial or municipal water supplies, as well as the volume recharged to the groundwater supply. Expected recovery from the RO process is 95%. RO treated water will be blended with filtered water to produce a water blend with approximately 500 mg/L TDS. Based on the Water Quality Standards for Groundwaters of the State of Washington (WAC 173-200), this effluent quality is suitable for beneficial uses such as groundwater recharge, irrigation, or industrial reuse. The project will conserve approximately 784 acre-feet/year of groundwater currently used for industrial cooling by replacing groundwater with reclaimed or reuse water. Additionally, the project will recharge 902 acre-feet/year of groundwater, and will make 1461 acre-feet/year available for irrigation. The total water reuse (sales) volume will be 3147 acre-feet/year. The irrigation pipeline will provide treated reuse and reclaimed water for up to 490 acres of irrigation.

Environmental/Regulatory/ESA Benefits: State required water quality improvements related to eliminating high TDS levels will be documented by end-of-pipe monitoring. Groundwater monitoring at the percolation beds and other shallow groundwater recharge sites will document improvement of groundwater quality relative to background concentrations through the City's recordkeeping procedures and regular reporting to the State Department of Ecology. Remaining surface water discharge will be monitored for pollutants including biochemical oxygen demand and suspended solids, and the reduction in pollutant load relative to the current operation can be calculated. The new pipeline will help meet Reclamation's goal to discontinue all non-agricultural discharges to its canal systems. The project will preserve and enhance groundwater supplies in the Quincy groundwater subarea by: 1. creating a supply of reuse and reclaimed water and 2. increasing groundwater supply in the Quincy area by recharging surplus reuse and reclaimed water through percolation basins and a recharge network.

Energy Savings/Alternative Energy Benefits: As part of the proposed project, a treatment system will be installed to remove other constituents from the biogas and

produce commercial fuel grade natural gas, which can be sold. The system will produce approximately 210 million cubic feet of gas per year. Energy recovery will be tracked by monitoring gas production. The project will also install high-efficiency blowers at the IWTP. Energy efficiencies that are expected to result from project implementation is 900,000 kilowatt-hours/year Energy savings from these blowers will be tracked by comparing the current electrical use at the plant to the electrical usage after construction of the project.

Subcriterion No. F.4: Reasonableness of Costs

Please include information related to the total project cost, annual acre-feet conserved, energy capacity, or other project benefits and the expected life of the improvement(s).

Expected project life is 20 years, or longer, based on industry-accepted life expectancy for mechanical equipment, including pumps, filters, and RO equipment.

The cost reasonableness factor is calculated to be:
Project Cost: $14,500,000 / (3,147 acre-feet/year x 20 years) = $230/acre-foot.

Annual Energy Savings: 900,000 kWh x $0.026/kWh = $23,400/yr

V.A.7 Evaluation Criterion G: Additional Non-Federal Funding (4 points)

*Up to **4 points** may be awarded to proposals that provide non-Federal funding in excess of 50 percent of the project costs. State the percentage of non-Federal funding provided.*

Non-Federal Funding /Total Project Cost:
$4,000,000 Federal Share (Other Secured + Reclamation)
/ $14,500,000 Total Project Funding = 28% federal share

V.A.8 Evaluation Criterion H: Connection to Reclamation Project Activities (4 points)

(1) How is the proposed project connected to Reclamation project activities?
The project is connected to Reclamation in multiple ways. The City of Quincy resides in the state designated Quincy Ground Water Subarea, established in 1973, which set forth rules for the administration of all ground waters within the subarea, including among others, commingled public ground waters and artificially stored ground waters from Reclamation's Columbia Basin Project (CBP) which provides river water for irrigation in the Quincy Valley. Shallow ground water (200 feet below surface) is managed as CBP water. Quincy is located in the federal Columbia Basin Project boundaries, and currently discharges treated industrial effluent into a Reclamation wasteway per an agreement that ends in September 2015. The City is currently negotiating with Reclamation to temporarily extend the use of the wasteway while funding is being secured to complete the project. Reclamation's decision to not renew this agreement has been a key driver for the City to pursue the current wastewater utility solution.

(2) Does the applicant receive Reclamation project water?
Yes. The City has applied for Municipal & Industrial (M&I) water to supplement reclaimed / reuse supply should the demand for reclaimed / reuse water exceed supply.

(3) Is the project on Reclamation project lands or involving Reclamation facilities?

The Project is located on City property. However, the City's IWTP currently discharges to a Reclamation wasteway. If M&I water is incorporated into the water market, it would be withdrawn from a Reclamation canal.

(4) Is the project in the same basin as a Reclamation project or activity?
Yes, the project is located in the Quincy Ground Water Subarea in the Columbia Basin.

(5) Will the proposed work contribute water to a basin where a Reclamation project is located?
Yes, the project will recharge groundwater in the Columbia Basin. As discussed above, the project will recharge groundwater in the Quincy Ground Water Subarea, a basin that Reclamation provides irrigation water as a component of the federal Columbia Basin Project

(6) Will the project help Reclamation meet trust responsibilities to Tribes?
Potentially.

Performance measures

All WaterSMART Grant applicants are required to propose a method (or "performance measure") of quantifying the actual benefits of their project once it is completed. Actual benefits are defined as water actually conserved, marketed, or better managed, as a direct result of the project. Quantifying project benefits is an important means to determine the relative effectiveness of various water management efforts, as well as the overall effectiveness of WaterSMART Grants. Provide a brief summary describing the performance measure that will be used to quantify actual benefits upon completion of the project (e.g., water saved, marketed, or better managed, or energy saved). For more information calculating performance measure, see Section VIII.A.1 "FY2015 WaterSMART Water and Energy Efficiency Grants: Performance Measures."

See Subcriterion No. F.3 above

Environmental and cultural resources compliance

To allow Reclamation to assess the probable environmental and cultural resources impacts and costs associated with each application, all applicants must respond to the following list of questions focusing on the NEPA, ESA, and NHPA requirements. Please answer the following questions to the best of your knowledge. If any question is not applicable to the project, please explain why.

Note: Applicants proposing a Funding Group II project must address the environmental and cultural resources compliance questions for their entire project, not just the first 1-year phase.

(1) Will the project impact the surrounding environment (e.g., soil [dust], air, water [quality and quantity], animal habitat)? Please briefly describe all earth-disturbing work and any work that will affect the air, water, or animal habitat in the project area. Please

also explain the impacts of such work on the surrounding environment and any steps that could be taken to minimize the impacts.

Operation of the proposed project will not emit any additional air pollutants, dust, or greenhouse gases (GHGs). New odors are not anticipated from the new/upgraded treatment facilities. The proposed project will not create any new major sources of noise that would result in any long-term noise impacts at surrounding sensitive land uses. Long-term air and noise impacts are not anticipated because noise generating equipment will be enclosed in buildings and because few residences are within close proximity to the new treatment facilities.

The proposed project will not discharge hazardous waste or toxic chemicals, and will not increase environmental health hazards. The only by-product of the long-term operation of the proposed project will be residuals or brine created by the reverse osmosis (RO) system. Brine is not considered a toxic chemical. These residuals will be managed at the City's existing brine management system at the IRWTP and IWTP lagoons.

Installation of the new filter and RO equipment will not adversely affect plant and animal habitat of the surrounding environment. The Phase 3 project sites are located in previously developed industrial areas within the City of Quincy, with no remaining vegetation or natural habitat. The equipment will be installed within existing buildings, and earth-disturbing work will not be required. Planning and design for the Phase 4 pipeline was completed with attention paid to the local environment and an alternative route was chosen to minimize the impacts.

The proposed project will not change the land uses of each site, and will not adversely affect surrounding land uses. A residential area is located north and east of the Microsoft/IRWTP site, where the proposed project will install the reverse osmosis (RO) system. Because the new RO equipment will be installed within an existing building in a developed area, the adjacent residential area will not be adversely affected by operation of the proposed project.

(2) Are you aware of any species listed or proposed to be listed as a Federal threatened or endangered species, or designated critical habitat in the project area? If so, would they be affected by any activities associated with the proposed project?

A list of threatened, endangered, proposed, and candidate species and designated critical habitat that may occur in the overall project area was issued by request from the United States Fish and Wildlife Service (USFWS) on November 19, 2013 (USFWS 2013). The USFWS listed two endangered species, the gray wolf (Canis lupus) and pygmy rabbit (Brachylagus idahoensis), two threatened species, bull trout (Salvenlinus confluentus) and Ute ladies'-tresses (Spiranthes diluvialis), one proposed threatened species, yellow-billed cuckoo (Coccyzus americanus), and three candidate species, greater sage-grouse (Centrocercus urophasianus), northern wormwood (Artemisia campestris var. wormskioldii), and the Washington ground squirrel (Urocitellus washingtoni).

Four of the species listed as potentially occurring within the Quincy area by the USFWS, bull trout, pygmy rabbit, greater sage-grouse, and Washington ground squirrel, have been documented within 5 miles of the project area. No species have been recorded within the

City of Quincy. Pygmy rabbits have been observed north of Quincy but have not been documented at the project sites for the new treatment equipment. The new wastewater treatment equipment will be installed within existing buildings located in an industrial area within the City of Quincy. The sites have been previously disturbed and vegetation removed, with no native habitat remaining. Threatened and endangered species would not be affected by installation of new wastewater treatment equipment within a developed industrial area in Quincy. Further NEPA evaluation will be completed prior to the construction of the pipeline but environmental considerations were accounted for in the development of the pipeline location to minimize impacts.

(3) Are there wetlands or other surface waters inside the project boundaries that potentially fall under CWA jurisdiction as "waters of the United States?" If so, please describe and estimate any impacts the project may have.

The project sites are not located near any wetlands, according to the National Wetlands Inventory and Washington State Coastal Atlas. The project sites also are not located in the immediate vicinity of any natural surface water bodies. In addition, the project sites are not located within any floodplains, according to the Flood Insurance Rate Maps (FIRM) developed by the Federal Emergency Management Agency's (FEMA). The proposed project will not require any work in or adjacent to any surface water bodies or wetland, which would potentially fall under CWA jurisdiction as "waters of the United States."

(4)When was the water delivery system constructed?

The treatment project does not include a water delivery system. The new water reuse pipeline will be constructed as part of the project described herein.

(5) Will the project result in any modification of or effects to, individual features of an irrigation system (e.g., headgates, canals, or flumes)? If so, state when those features were constructed and describe the nature and timing of any extensive alterations or modifications to those features completed previously.

Installation of new wastewater treatment equipment will not permanently alter or modify an existing irrigation system. The pipeline will supply irrigation water to potential customers that do not currently receive water from any irrigation system.

(6) Are any buildings, structures, or features in the irrigation district listed or eligible for listing on the National Register of Historic Places? A cultural resources specialist at your local Reclamation office or the State Historic Preservation Office can assist in answering this question.

The project sites within the City of Quincy are not located near any buildings, structures, or features listed or eligible for listing on the National Register of Historic Places. According to the Washington Information System for Architectural and Archaeological Records Data (WISAARD) database, there are three Historic Register Properties in the Quincy area, and these are outside the project sites. The closest registered property is the Quincy Cemetery at the intersection of F Street SW and 7th Avenue SW, which is approximately 2,000 feet south of the Microsoft/IRWTP Site.

(7) Are there any known archeological sites in the proposed project area?

There are not any known archaeological sites in the vicinity of the project sites. The new wastewater treatment equipment will be installed within existing buildings that are located in an industrial area of the City of Quincy. The phase 3 project sites have been previously excavated and substantially altered.

(8) Will the project have a disproportionately high and adverse effect on low income or minority populations?

The 2010 Census data show that the City of Quincy and Grant County have lower incomes and higher percentages of Hispanic or Latino persons (74% of the population in Quincy) than Washington State. While the Quincy area has the potential for low-income and minority populations, the project sites are located in industrial areas rather than in residential areas. The only project site adjacent to a residential area is the IRWTP located in the northeast corner of the Microsoft Columbia Data Center, where the new RO equipment will be installed. Because the new RO equipment will be installed within an existing building on site, adjacent residences will not be adversely affected by operation of the proposed project.

The proposed project will not result in any high adverse human health effects on minority and low-income populations, as well as not on the overall Quincy community. The proposed project will not generate any toxic chemicals, hazardous wastes, or air pollutants.

The proposed project will not result in any direct or indirect adverse impacts on socioeconomic conditions of the Quincy areas. The proposed project will not displace any residences, businesses, or jobs. It will not alter the land uses of the project sites and adjacent properties. The proposed project also will not affect the population or demographics of the Quincy area.

The City is currently conducting a Cost of Service Allocation and Rate Study to review the cost impacts of the proposed project on ratepayers, including low income and minority populations. The City has already implemented a surcharge for customers that place a higher TDS burden on the system so that low strength users (such as low income elderly) will not pay for those extra costs. The proposed project could indirectly benefit the socioeconomic conditions of Quincy by supplying irrigation water for increased farming activity and by providing reuse water for future industrial activity, thereby increasing revenues to offset residential customer costs and supplying jobs.

(9) Will the project limit access to and ceremonial use of Indian sacred sites or result in other impacts on tribal lands?

Not Applicable. The project sites are not located on or near tribal land. The Quincy area is within the traditional territory of the Confederated Tribes of the Colville Reservation and the Confederated Tribes and Bands of the Yakima Nation.

(10) Will the project contribute to the introduction, continued existence, or spread of noxious weeds or non-native invasive species known to occur in the area?

The proposed project not will introduce or spread noxious weeds or non-native species. The proposed treatment project will install new treatment equipment within existing buildings located in industrial sites within the City of Quincy.

Required permits or approvals

Applicants must state in the application whether any permits or approvals are required and explain the plan for obtaining such permits or approvals.

Required permits include the following:

A modification to the existing State Waste Discharge Permit for the MWRF to account for the increased capacity of the percolation beds and the demineralized water sent from the IRWTP to the beds during periods of low irrigation / industrial reuse demand.

A Pretreatment permit authorizing discharge of demineralized water from the IRWTP to the MWRF.

Conditions in the IWTP NPDES permit addressing reuse by industrial and irrigation users.

Additionally, local permits (building permit, excavation permit, etc.) may be required for construction.

In the future, when the aquifer recharge system study is complete and the system is fully developed, the IWTP NPDES permit will be replaced with a State Waste Discharge Permit with conditions addressing underground injection control.

The plan for obtaining the permits will be completed as part of the final design effort. The City is currently working with Ecology on the Discharge permit(s) requirements that the state will issue. Ecology is has received and been asked to comment on the *Industrial Wastewater Treatment Plant Engineering Report.* The City was delegated pretreatment permitting authority by Ecology in 2012 and will issue and administer the pretreatment permit.

Letters of project support

See Subcriterion E.4 above for project support information

Attached to this application are letters or documentation of financial support from:

- Washington State Public Works Trust Fund for $300,000
- Washington State legislative grant for $700,000
- Washington State Community Economic Revitalization Board grant for $1 million
- US Economic Development Administration grant for $3 million

Official Resolution

Include an official resolution adopted by the applicant's board of directors or governing body, or for state government entities, an official authorized to commit the applicant to the financial and legal obligations associated with receipt of WaterSMART Grant financial assistance, verifying:

- *The identity of the official with legal authority to enter into agreement*
- *The board of directors, governing body, or appropriate official who has reviewed and supports the application submitted*
- *The capability of the applicant to provide the amount of funding and/or in-kind contributions specified in the funding plan*
- *That the applicant will work with Reclamation to meet established deadlines for entering into a cooperative agreement*

An official resolution meeting the requirements set forth above is mandatory and attached to the application.

Project Budget

o Funding plan and letters of commitment (attached to the application)

o Budget proposal

o Budget narrative

o Budget Form SF-424C (included in the application)

Funding Plan and Letters of Commitment

Describe how the non-Reclamation share of project costs will be obtained. Reclamation will use this information in making a determination of financial capability.

The Reclamation grant required 50% match for the $1million funding request is secured and will be provided by the $700,000 from the State grant, a $300,000 PWTF loan, $1 million from a CERB grant and/or City funds.

Project funding provided by a source other than the applicant shall be supported with letters of commitment from these additional sources. This is a **mandatory requirement and letters are attached**. Letters of commitment shall identify the following elements:

(1) The amount of funding commitment

(2) The date the funds will be available to the applicant

(3) Any time constraints on the availability of funds

(4) Any other contingencies associated with the funding commitment. Commitment letters from third party funding sources should be submitted with your project application. If commitment letters are not available at the time of the application submission, please provide a timeline for submission of all commitment letters. Cost share funding from sources outside the applicant's organization (e.g., loans or state grants), should be secured and available to the applicant prior to award.

The amount of the commitment is described above. Funds are available to the applicant and will be available Funding has been secured by the Public Works Trust Fund, a Washington State Budget Grant and City funds to total over $1 million dollars for the minimum required non-federal matching funds for this request. Letters of commitment are attached to the application. The attached letters show the amount of funding, date available, time constraints and /or other contingencies where applicable.

Recipient has secured non-Federal cost-share for the entire match to Reclamation grant funds.

Note: Applicants proposing a Funding Group II project are not required to have non-Federal cost share funding secured for the entire project at the time of award. Funding Group II applicants must demonstrate sufficient evidence that non-Federal cost-share for the first year of the project will be available by the start of that phase and must describe a plan and schedule for securing non Federal funding for subsequent years of the project.

The funding plan must include all project costs, as follows:

(1) How you will make your contribution to the cost share requirement, such as monetary and/or in-kind contributions and source funds contributed by the applicant (e.g., reserve account, tax revenue, and/or assessments).

The City will make its contribution to the cost share from funding already secured by the Public Works Trust Fund and a Washington State Budget Grant to total $1 million dollars for the minimum required non-federal matching funds for this request. Also, the City has and will contribute approximately $1.5 million in engineering and design fees for Phase 3 and 4. In 2013 the City obtained a $1 million non-federal Community Economic Revitalization Board grant and a portion of those funds could be used to match this request as well.

(2) Describe any in-kind costs incurred before the anticipated project start date that you seek to include as project costs. Include:

(a) What project expenses have been incurred

(b) How they benefitted the project

(c) The amount of the expense

(d) The date of cost incurrence

The City has secured $6 million in "in-kind" facilities from Microsoft for the Phase 3 project. In late 2013, the City began modifications to those facilities as part of its agreement with Microsoft. Improvements related to the "in-kind' facility are not shown to meet the local match, or to be reimbursed, but could be considered a local contribution to the project if necessary.

(3) Provide the identity and amount of funding to be provided by funding partners, as well as the required letters of commitment.

Funding partners include:

Washington State Public Works Trust Fund (PWTF) for $300,000
Washington State legislative grant for $700,000
Washington State Community Economic Revitalization Board (CERB) for $1 million
Economic Development Administration (EDA) grant for $3 million

Letters of support are attached to the application.

(4) Describe any funding requested or received from other Federal partners. Note: other sources of Federal funding may not be counted towards your 50 percent cost share unless otherwise allowed by statute.

The City received a $3 million grant from the EDA for Phase 3 work that is underway. Those funds are not being used as a part of the local match for this request. The City

intends to apply for additional funds and may seek federal funds where possible to finance the remainder of the project costs.

(5) Describe any pending funding requests that have not yet been approved, and explain how the project will be affected if such funding is denied.

The City has a $7 million funding request for state PWTF loans that have not yet been approved. The project was included on the PWTF 2015 initial project list but the State legislature is still finalizing the budget and funds available through the PWTF. The City has hired a lobbyist to continue to lobby for state support on this important project. The City is also pursuing a $2 million state capital budget request, a 2015/16 CERB request, and other state loans. However, if those funds are not made available, the City will apply for funds from Rural Development, the state Community Development Block Grant, and/or other sources for un-funded portions of the project. The mix of additional federal funds could affect the overall funding for the project but the Reclamation match has already been secured and additional federal funding would not affect the 50% match for this application. If low cost funding is denied, the City will have to seek out more costly forms of funding for the project in its effort to meet the Reclamation established deadline. The City continues to negotiate with Reclamation and other interested parties on this issue.

Please include the following chart (Table 4) to summarize your non-Federal and other Federal funding sources. Denote in-kind contributions with an asterisk (*). Please ensure that the total Federal funding (Reclamation and all other Federal sources) does not exceed 50 percent of the total estimated project cost.

Table 4.—Summary of non-Federal and Federal funding sources

Funding sources	Funding amount
Non-Federal entities	
1. Community Economic Revitalization Board	$1,000,000
2. Public Works Trust Fund	$7,300,000
3. State Budget grant	$700,000
4. City Funds	$1,500,000
5. Other	$0
Non-Federal subtotal:	$10,500,000
Other Federal entities	
1. Economic Development Administration	$3,000,000
2. Other	$
Other Federal subtotal:	$3,000,000
Requested Reclamation funding:	$1,000,000
Total project funding:	$14,500,000

*The City received a $6 million in kind facility contribution for Phase 3

For applicants submitting a proposal under Funding Group II, please include the following chart (Table 5) to summarize your Federal funding request by year.

Table 5.—Funding Group II funding request

Funding Group II request			
	Year 1 (FY 2015)	Year 2 (FY 2016)	Year 3 (FY 2017)
Reclamation Funding requested	$500,000	$500,000	$0

Budget Proposal

The project budget shall include detailed information on the categories listed below and must clearly identify all project costs. Unit costs shall be provided for all budget items including the cost of work to be provided by contractors (The budget for completion of design will be developed upon completion of the preliminary design work currently in progress. A detailed rate sheet is attached. A detailed budget of time, rates, supplies, and materials for construction will be developed upon completion of the engineering design). Additionally, applicants shall include a narrative description of the items included in the project budget, including the value of in-kind contributions of goods and services provided to complete the project. It is strongly advised that applicants use the budget proposal format shown below on Tables 6 and 7 or a similar format that provides this information.

Table 6.—Funding Sources

Funding sources for Reclamation Grant	Percent of total project cost	Total cost by source
Recipient funding	72.4%	$ - 10,500,000
Reclamation funding	6.9%	$ - 1,000,000
Other Federal funding	20.7%	$ - 3,000,000
Totals	**100%**	**$ -** 14,500,000

Table 7.—Sample budget proposal format

Budget item description	Computation		Quantity type (hours/days)	Total cost
	$/Unit	Quantity		
Salaries and wages				
Tim Snead, Proj. Manager				**To be included in City O&M cost**
Ariel Belino, City Engineer				**To be included in City O&M cost. Reporting included below**
Equipment				
Reverse Osmosis System				**$1,600,000**
Filter System				**$900,000**
Pumps				**$585,000**
Supplies/materials				
Contractual/construction (pipeline)				
Engineering Consultant				**$1,300,000**
Construction Contractor (major equipment listed separately)				**$ 5,950,000**
Other (pipeline)				**$4,000,000**
Reporting (Ariel Belino, City Engineer)				**$15,000**
Environmental compliance costs				**$ 150,000**
Total project costs				**$14,500,000**

Budget Narrative

Submission of a budget narrative is mandatory. An award will not be made to any applicant who fails to fully disclose this information. The budget narrative provides a discussion of, or explanation for, items included in the budget proposal. Include the value of in-kind contributions of goods and services and sources of funds provided to complete the project. The types of information to describe in the narrative include, but are not limited, to those listed in the following subsections.

The budget items included in the budget proposal are primarily related to the contractual costs for engineering and construction of the Phase 3 and Phase 4 pipeline facilities described in detail in the Technical Proposal of this application.

Salaries and Wages

There will be project oversight and management performed primarily by Tim Snead (Project Manager) and Ariel Belino (City Engineer/Asst. Project Manager). All staffing

and overhead costs will be funded from the City's operation and maintenance (O&M) budget.

Equipment

Major equipment that must be purchased includes:

Reverse osmosis equipment – required for removal of TDS to produce water suitable for irrigation and percolation.

Filtration equipment – required for pretreatment of RO feed water and to remove solids from irrigation water, and to produce industrial reuse water. Initial construction will include approximately 4.5 mgd of filter vessels and media and associated equipment.

Pumps – required for conveyance. Initial construction will be sized to match filter system.

Pipeline materials

Pricing is based on multiple quotes from equipment vendors and industry-standard cost estimating methods.

Materials and Supplies

Included in equipment cost or will be general supplies and capital outlays in the City's O&M budget.

Contractual

The City has retained Brown and Caldwell Consultants to undertake the Engineering effort. Design of the treatment system will be completed by the City's consulting engineer. The budget for completion of design will be developed upon completion of the preliminary design work currently in progress. A detailed rate sheet is attached. A detailed budget of time, rates, supplies, and materials for construction will be developed upon completion of the engineering design. It is expected that major equipment, including the filter system, RO system, and pumps, will be pre-purchased by the City. The City also has a Rate and Funding Consultant and an Environmental Consultant.

A construction contractor will be hired once funding for construction is secured and design is complete. Construction will be completed by a general contractor. The contractor will be responsible for construction as well as procurement of supplies and building materials, other than major equipment. Materials will include structural materials such as concrete and reinforcing steel, piping, valves, electrical equipment, and finishes. The general contractor will also furnish labor for construction and equipment installation.

Environmental and Regulatory Compliance Costs

Applicants must include a line item in their budget to cover environmental compliance costs. "Environmental compliance costs" refer to costs incurred by Reclamation or the

recipient in complying with environmental regulations applicable to a WaterSMART Grant, including costs associated with any required documentation of environmental compliance, analyses, permits, or approvals. Applicable Federal environmental laws could include NEPA, ESA, NHPA, and the CWA, and other regulations depending on the project. Such costs may include, but are not limited to:

(1) The cost incurred by Reclamation to determine the level of environmental compliance required for the project

(2) The cost incurred by Reclamation, the recipient, or a consultant to prepare any necessary environmental compliance documents or reports

(3) The cost incurred by Reclamation to review any environmental compliance documents prepared by a consultant

(4) The cost incurred by the recipient in acquiring any required approvals or permits, or in implementing any required mitigation measures

The amount of the line item should be based on the actual expected environmental compliance costs for the project. However, the minimum amount budgeted for environmental compliance should be equal to at least 1-2 percent of the total project costs. If the amount budgeted is less than 1-2 percent of the total project costs, you must include a compelling explanation of why less than 1-2 percent was budgeted.

How environmental compliance activities will be performed (e.g., by Reclamation, the applicant, or a consultant) and how the environmental compliance funds will be spent, will be determined pursuant to subsequent agreement between Reclamation and the applicant. If any portion of the funds budgeted for environmental compliance is not required for compliance activities, such funds may be reallocated to the project, if appropriate.

Reporting
The City will complete project reporting (including final project and evaluation costs) in accordance with Section VI.C of this application.

Fringe Benefits *Not applicable*

Travel *Not applicable*

Other Expenses *Not applicable*

Indirect Costs *Not applicable*

Total Costs

The total cost of the Phase 3 and Phase 4 pipeline project, including the Federal and non-Federal cost-share amounts, is shown on Table 3 above.

Budget Form
SF-424C, Budget Information—Construction Programs – is included with the application

U. S. DEPARTMENT OF COMMERCE
Economic Development Administration
915 Second Avenue, Room 1890
Seattle, WA 98174
Fax: 206.220.7669
Voice: 206.220.7660

November 2, 2011

Honorable Jim Hemberry
Mayor, City of Quincy
104 B Street SW
Quincy, Washington 98848-0338

NOV 16 2011

RE: EDA Award No. 07-01-06731
Wastewater Reclamation Expansion

Dear Mr. Hemberry:

We have been notified that the Industrial Wastewater Reclamation Expansion design and construction in the City of Quincy (City) has been approved and that the City has accepted the EDA Financial Assistance Award. We are pleased and take this opportunity to offer you our fullest cooperation and assistance in managing this project. The Engineering and Construction staff of this office shares with you the responsibility of administering this project. Please direct future correspondence to the attention of Mary Rudokas, project manager.

As soon as possible we would like to arrange with you a Project Management Conference call. Please contact Mary at (206) 220-7694 to schedule a time for the conference call.

Enclosed is CD entitled the "Post Approval Process" which provides requirements for approved construction projects. This CD outlines necessary procedures and actions. The project administrator and/or architect/engineer should be familiar with the CD.

Your attention is directed to the time schedule special condition in Exhibit "A" of the Financial Assistance Award. We emphasize the importance of the schedule deadlines in implementing this project. EDA's policy regarding the time schedule provides little flexibility. Failure to meet time schedule deadlines could result in termination of the Award.

Please reference the Standard Terms and Conditions in Exhibit "B" of the Financial Assistance Award. Under paragraph B3, the approved budget for this award is predicated upon a sharing of allowable costs. In the event that the allowable costs are less than the approved budget, then the Federal share of this Award will be limited to 50% percent of the actual allowable costs, but in no event shall the EDA share exceed the Federal Award of $ 3,000,000.

DISTRIBUTED
Jim, Tim
11/16/11
SY

EDA funds will be disbursed through the use of electronic fund transfers to your bank. You should discuss the prerequisites to disbursement as well as the disbursement arrangements with your assigned project manager as early as possible.

In all these matters and throughout the project, your EDA Project Manager will work to provide prompt assistance to ensure schedule compliance and successful implementation of your project. If you have any questions, please feel free to call Mary.

Sincerely,

Richard Manwaring
Area Director

Enclosures

Copy to: David Porter, EDR

SENT TO ACCOUNTING ON
10-20-2011

FORM CD-450 (REV.09-19-11) (CD450-1PW)	U.S. DEPARTMENT OF COMMERCE	Seattle Regional Office ☒ GRANT ☐ COOPERATIVE AGREEMENT
	FINANCIAL ASSISTANCE AWARD	AWARD PERIOD: **From date of approval shown below through 60 months**
RECIPIENT NAME	City of Quincy	AWARD NUMBER 07-01-06731
STREET ADDRESS	104 B Street SW	FEDERAL SHARE OF COST $ 3,000,000
CITY, STATE, ZIP CODE	Quincy, Washington 98848-0338	RECIPIENT SHARE OF COST $ 3,000,000
ACCOUNTING CODE:	20 11 40 20 01 00 210 41 10 00 00	TOTAL ESTIMATED COST $ 6,000,000

DEPARTMENT OF COMMERCE OPERATING UNIT **Economic Development Administration**

AUTHORITY **42 U.S.C. Section 3141, et seq. Public Works and Economic Development Act, as amended by Public Law 108-373.**

CFDA NO. 11.300 PROJECT TITLE: Public Works and Economic Development Facilities Program

BUREAU	FUND	FCFY	PROJECT-TASK	ORGANIZATION	OBJECT CLASS	CLASS EXPEND	CLASS 4	ENTITY
EDA	40	11	00	07	41	10	00	00

This Award approved by the Grants Officer is issued in triplicate and constitutes an obligation of federal funding. By signing the three documents, the Recipient agrees to comply with the Award provisions checked below and attached. Upon acceptance by the Recipient, two signed Award documents shall be returned to the Grants Officer and the third document shall be retained by the Recipient. If not signed and returned without modification by the Recipient within 30 days of receipt, the Grants Officer may unilaterally terminate this Award.

- ☒ EDA Standard Terms and Conditions Public Works and Implementation Construction Components, dated 12/2007.
- ☒ Special Award Conditions and Attachments
- ☒ Line Item Budget
- ☒ 15 CFR Part 24, Uniform Admin Requirements for Grants/Cooperative Agreements to State & Local Governments
- ☒ OMB Circular A-87, Cost Principles for State and Local Governments and Indian Tribal Governments
- ☒ OMB Circular A-133, Audits of States, Local Governments, and Non-Profit Organizations
- ☐ 15 CFR, Part 14, Uniform Administrative Requirements for Grants and Agreements with Institutions of Higher Education, Hospitals, Other Nonprofit, and Commercial Organizations
- ☐ OMB Circular A-122, Cost Principles for Nonprofit Organizations
- ☐ OMB Circular A-21, Cost Principles for Educational Institutions
- ☐ EDA Standard Terms and Conditions Capacity Building Programs
- ☐ Department of Commerce Financial Assistance Standard Terms and Conditions, dated March 2008

Economic Development Administration
Seattle Regional Office
OCT 07 2011
Office of Regional Director

SIGNATURE OF DEPARTMENT OF COMMERCE GRANTS OFFICER A. Leonard Smith	NAME A. Leonard Smith TITLE Regional Director	DATE Sep 21, 2011
SIGNATURE OF AUTHORIZED RECIPIENT OFFICIAL Jim Hemberry	TYPED NAME AND TITLE Jim Hemberry Mayor	DATE Oct 5, 2011

INVESTING IN WASHINGTON'S ECONOMIC FUTURE
Community Economic Revitalization Board
Washington State Department of Commerce
1011 Plum Street SE
Post Office Box 42525
Olympia, Washington 98504-2525

RECEIVED
MAR 11 2013
Department of Commerce

Grant Agreement between:

City of Quincy

and

Community Economic Revitalization Board

For:

Project Name: **Industrial Water Reuse Utility Project**

Contract Number: **13-96303-034**

Contract Type: **CERB Economic Development Grant**

Execution / Start Date: Contract Execution Date

(to be filled by the Community Economic Revitalization Board)

DECLARATIONS

CLIENT INFORMATION	
Legal Name	City of Quincy
Contract Number	13-96303-034
Federal Tax ID #	91-6001490
State Client #	SWV000316-00

PROJECT INFORMATION	
Title	Industrial Water Reuse Utility Project
Project City	Quincy
Project State	Washington
Project Zip	98848

CONTRACT TERMS and CONDITIONS	
Contract Amount	$1,000,000.00
Biennium	2011 - 2013
Biennium Close Date	June 30, 2013
Earliest Date for Construction Reimbursement	Dec 4, 2012 *(earliest date for reimbursable expenditures)*
Time of Performance	36 months from contract execution to project completion: 12 months from contract execution to begin construction 24 months from start of construction to project completion, not to exceed 36 months in total.
Special Conditions	Evidence of having permits, prior to commencing project construction on or before March 2014.

CONTRACT FACE SHEET

Contract Number: 13-96303-034

Washington State Community Economic Revitalization Board

Economic Development Grant

1. Contractor City of Quincy PO Box 338 Quincy, WA 98848-	**2. Contractor Doing Business As (optional)** N/A
3. Contractor Representative N/A	**4. CERB Board Representative** N/A

5. Contract Amount	6. Funding Source	7. Contract Start Date	7. Contract End Date
$1,000,000.00	Federal: ☐ State: ☑ Other: ☐ N/A: ☐	Contract Execution Date	36 Months from contract execution (provided that funds are re-appropriated into the next biennium.)

9. Federal Funds (as applicable)	Federal Agency	CFDA Number
	N/A	N/A

10. Tax ID #	11. SWV #	12. UBI #	13. DUNS #
91-6001490	SWV000316-00		

14. Contract Purpose

The Board, defined as the Washington State Community Economic Revitalization Board, and the Contractor have entered into this Contract to undertake a project that furthers the goals and objectives of the CERB Administered Economic Development, Innovation, & Export Grants Program as created in Chapter 2, Laws of 2012, 2nd Special Session, Section 1005.

The Board and Contractor acknowledge and accept the terms of this Contract and attachments and have executed this Contract on the date below to start as of the date and year last written below. The rights and obligations of both parties to this Contract are governed by this Contract and the following other documents incorporated by reference: Contract Terms and Conditions including ATTACHMENT I: PROJECT SCOPE OF WORK; and ATTACHMENT II: CERTIFICATION OF THE PAYMENT AND REPORTING OF PREVAILING WAGES; ATTACHMENT III: CERTIFICATION OF AVAILABILITY OF FUNDS TO COMPLETE THE PROJECT.

FOR THE CONTRACTOR	FOR THE COMMUNITY ECONOMIC REVITALIZATION BOARD
Jim Hemberry Signature	Mark Urdahl, Chair of the CERB Board
Jim Hemberry Print Name	8/14/13 Date
MAYOR Title	*APPROVED AS TO FORM ONLY* *This 3rd Day of January, 2013* Rob McKenna Attorney General
3/6/2013 Date	*Signature on file* Sandra Adix Assistant Attorney General

Washington State
Public Works Board
1011 Plum Street SE
Post Office Box 42525
Olympia, Washington 98504-2525

Pre-Construction Loan Agreement between:

City of Quincy

and

Public Works Board

For:

Project Name: **Quincy Water Reclamation and Reuse Utility, Phase 1**
Loan Number: **PR13-951-083**
Loan Type: **PreConstruction**

Execution/Start Date: Contract Execution Date
(to be filled by the Public Works Board)

CONTRACT FACE SHEET

Contract Number: PR13-951-083

Washington State Department of Commerce

PUBLIC WORKS BOARD
CONSTRUCTION LOAN CONTRACT

1. Contractor City of Quincy 104 B Street SW Quincy, WA 98848		**2. Contractor Doing Business As (optional)** N/A	
3. Contractor Representative N/A		**4. Public Works Board Representative**	
5. Contract Amount $300,000.00	**6. Funding Source** **Federal:** ☐ **State:** ☑ **Other:** ☐ **N/A:** ☐	**7. Contract Start Date** Contract Execution Date	**8. Contract End Date** June 1,2017
9. Federal Funds (as applicable) N/A	**Federal Agency** N/A	**CFDA Number** N/A	
10. Tax ID # 916001490	**11. SWV #** 0000316	**12. UBI #**	**13. DUNS #**

14. Contract Purpose
Fund a project of a local government for preconstruction activities for streets and roads, bridges, drinking water systems, stormwater systems, sanitary sewage systems, and solid waste facilities, including recycling facilities.

The Board, defined as the Washington State Public Works Board, and Contractor acknowledge and accept the terms of this Contract and attachments and have executed this Contract on the date below to start as of the date and year last written below. The rights and obligations of both parties to this Contract are governed by this Contract and the following other documents incorporated by reference: Contract Terms and Conditions including Declarations Page; and Attachment I: Attorney's Certification.

FOR THE CONTRACTOR	FOR PUBLIC WORKS BOARD
Jim Hemberry Signature	John LaRocque, Executive Director
Jim Hemberry Print Name	2/7/13 Date
MAYOR Title	**APPROVED AS TO FORM ONLY**
1/28/2013 Date	This 3rd Day of December, 2012 Rob McKenna Attorney General
	Signature on file Kathryn Wyatt Assistant Attorney General

DECLARATION (continued)

Loan Number:	**PR13-951-083**
Project Title:	**Quincy Water Reclamation and Reuse Utility, Phase**

Scope of Work:
The preconstruction activities being done for this project include the following primary elements:

Final design and bid period services, including preparation of a 60 percent design review submittal, pre-design report for regulatory review, bid drawing set and specifications package, permitting and approval, services during bidding and award, public involvement.

Costs may include, but are not limited to, engineering, cultural and historical resources review, environmental review, permits, public involvement and bid documents that allow the City to meet local, state, and federal standards.

STATE OF WASHINGTON
DEPARTMENT OF COMMERCE
1011 Plum Street SE • PO Box 42525 • Olympia, Washington 98504-2525 • (360) 725-4000
www.commerce.wa.gov

July 31, 2013

Mr. Tim Snead
City Administrator
City of Quincy
104 B Street Southwest
Quincy, WA 98848

RE: Quincy Industrial Water Reclamation & Reuse

Dear Mr. Snead:

Congratulations on being awarded a $700,000 state grant in the 2013 Capital Budget for your Quincy Industrial Water Reclamation & Reuse project. Funds for your project were included in the budget at the request of the Governor or Legislature. Now that the capital budget has been signed into law, our role is to release these funds in a way that meets the intent of the Legislature and conforms to state regulations. We strive to do so expeditiously and will make the process as simple as possible for you.

Before you can receive the funds, a contract will need to be executed between your organization and the Department of Commerce. In order to get the contracting process started, please follow these steps:

1. Complete the attached Contract Readiness Survey. Please note that there will be a three percent administrative fee (no more than $50,000) charged to the grant;

2. Attach documentation for committed funds (copies of award letters, council appropriations, etc.), if applicable;

3. Complete the attached LEED certification declaration;

4. Attach a copy of the project request form/packet that you submitted to the Legislature;

Send the above documents by **August 15th** to:

Washington State Department of Commerce
ATTN: Chris Gagnon
PO Box 42525
Olympia, WA 98504-2525
or
christina.gagnon@commerce.wa.gov

DECLARATIONS

CLIENT INFORMATION

Legal Name:	**City of Quincy**
Contract Number:	**CD14-965-016**
State Wide Vendor Number:	**0000316-00**

PROJECT INFORMATION

Project Title:	**Quincy Industrial Water Reclamation & Reuse**
Project City:	**Quincy**
Project State:	**Washington**
Project Zip Code:	**98848-0338**

CONTRACT INFORMATION

Grant Amount:	**$679,000.00**
Appropriation Number:	**ESSB 5035, 2013**
Contract End Date:	**6/30/2015 (subject to reappropriation)**
Biennium:	**2013 - 2015**
Biennium Close Date:	**6/30/2015**
Earliest Date for Construction Reimbursement:	**07/01/2010**

SPECIAL TERMS AND CONDITIONS GOVERNING THIS AGREEMENT

None.

Reuse Project Expenditures (as of December 2014):

Construction Cost:

Phase Ia - Quincy Drain Crossing:	$80,943.34
Phase II (with portion of Phase III) Industrial Reuse Utility Phase II:	$3,274,113.71
Total Construction Cost (to date):	**$3,355.057.05**

A/E Cost:

Preliminary Engineering (Brown & Caldwell)

Task Order # 8 (Industrial Reuse Utility Pre-design)	$188,524.75
Task Order # 9 (Industrial Reuse Program Management)	$780,874.81
Task Order # 11 (Industrial Reuse Design package 1 & 2)	$557,905.51
P.E. Brown & Caldwell Total (to date)	**$1,527,305.07**

Construction Management (Gray & Osborne, Inc.)

Project Inspection Fees	$162,730.38
A/E Fees	$145,013.24
Other A/E Fees (Survey, Staking, Admin.)	$3,365.39
Total Construction Management Cost (to date)	**$311,109.01**

Other Cost (Bid Ads, Permits, Electrical, water, sewer)

Bid Ads	$6,170.44
Permit (Building)	$3,529.15
Utility Cost	$35,434.00
Total Other Costs (to date)	**$45,133.59**

Total Project Expenditures as of December 2014	**$5,238,604.72**

CITY OF QUINCY, WASHINGTON

RESOLUTION NO. 14-318

A RESOLUTION MEETING THE REQUIREMENTS SET FORTH IN THE APPLICATION FOR FINANCIAL ASSISTANCE FROM THE BUREAU OF RECLAMATION'S WATERSMART GRANT

WHEREAS, the City of Quincy will be submitting application for financial assistance to the Bureau of Reclamation through its WATERSMART Grant Program:

WHEREAS, one of the requirements for the funding assistance application is for the City of Quincy to adopt an official resolution:

The City Council of the City of Quincy, Washington, therefore resolves as follows:

Section 1. The identity of the official with legal authority to enter into agreement is the *City Mayor*.

Section 2. The *City Administrator* is the designated official that will review and will support the application submitted.

Section 3. That the *City of Quincy* has the capability to provide the required funding match and/or in kind contributions specified in the funding plan.

Section 4. That the *City of Quincy* will work with the Bureau of Reclamation to meet established deadlines for entering into a cooperative agreement.

Section 5. This Resolution shall take effect upon passage of this resolution.

PASSED by the City Council of the City of Quincy, Washington, this 21st day of January, 2014.

Jim Hemberry

Jim Hemberry, MAYOR

ATTEST:

Sue Miller

Sue Miller, CITY CLERK

Approved as to form:

OFFICE OF THE CITY ATTORNEY

_____

Allan Galbraith

FILED WITH THE CITY CLERK: January 16, 2014
PASSED BY THE CITY COUNCIL: January 21, 2014
EFFECTIVE DATE: January 21, 2014
RESOLUTION NO.: 14-318

MARIA CANTWELL
WASHINGTON

COMMITTEES:
COMMERCE, SCIENCE, AND TRANSPORTATION
ENERGY AND NATURAL RESOURCES
FINANCE
INDIAN AFFAIRS
SMALL BUSINESS

United States Senate

WASHINGTON, DC 20510–4705

January 14, 2014

Commissioner Michael L. Conner
U.S. Department of Interior
Bureau of Reclamation
1849 C Street, NW
Washington, D.C. 20240

RE: R14AS00001 WaterSMART Water and Energy Efficiency Grants FY 2014
City of Quincy, Washington

Dear Commissioner Conner,

I am writing in support of the City of Quincy's (City) application to the U.S. Department of Interior's Bureau of Reclamation WaterSMART Program to complete Phase 3 of the City's water reuse utility. The City is making an application for a grant of one million dollars to convert an ion exchange plant into a high efficiency reverse osmosis (HERO) facility. This facility will generate industrial reuse water for beneficial use, land application and groundwater recharge, service water utility needs, and will improve water quality for the City by reducing the Total Dissolvable Solids (TDS) levels in the facility percolation beds.

The purpose of the WaterSMART Program is to increase water conservation and identify strategies to ensure that future generations will have sufficient supplies of clean water for drinking, economic activities, recreation and ecosystem health. The City of Quincy's Phase 3 plan to retrofit the current demineralization plant into a high efficiency reverse osmosis facility serves the needs of City water users and to some degree, the Quincy ground water subarea to meet the stated aims of the WaterSMART grant.

This environmentally innovative water reuse project hopes to provide low cost, clean, reuse water for the City of Quincy, Microsoft, other data centers, and farmers while providing revenue to offset the City's expenses. The City has a relatively small, rural and low-to-moderate income population. I am told that without the grant's funding, the project will create a financial hardship on the people of Quincy.

Please give full and fair consideration to the City of Quincy's grant application.

Sincerely,

Maria Cantwell
United States Senator

EVERETT
2930 Wetmore Avenue
Suite 9B
Everett, WA 98201
(425) 303-0114
Fax: (425) 303-8351

RICHLAND
825 Jadwin Avenue
Suite 204/204A
Richland, WA 99352
(509) 946-8108
Fax: (509) 946-8937

SEATTLE
Jackson Federal Building
915 2nd Avenue, Suite 3206
Seattle, WA 98174-1003
(206) 220-6400
Toll Free: 1-888-648-7328
Fax: (206) 220-6404

SPOKANE
U.S. Federal Courthouse
West 920 Riverside, Suite 697
Spokane, WA 99201
(509) 353-2507
Fax: (509) 353-2547

TACOMA
950 Pacific Avenue
Suite 615
Tacoma, WA 98402
(253) 572-2281
Fax: (253) 572-5879

VANCOUVER
Marshall House
1313 Officers' Row
First Floor
Vancouver, WA 98661
(360) 696-7838
Fax: (360) 696-7844

WASHINGTON, DC
311 Hart Senate Office Building
Washington, DC 20510-4705
(202) 224-3441
Fax: (202) 228-0514

Web: http://cantwell.senate.gov
PRINTED ON RECYCLED PAPER

DOC HASTINGS
4TH DISTRICT, WASHINGTON

COMMITTEE ON
NATURAL RESOURCES
CHAIRMAN

1203 LONGWORTH HOUSE OFFICE BUILDING
WASHINGTON, DC 20515
(202) 225-5816

2715 SAINT ANDREWS LOOP, SUITE D
PASCO, WA 99301
(509) 543-9396

402 EAST YAKIMA AVENUE, SUITE 760
YAKIMA, WA 98901
(509) 452-3243

www.hastings.house.gov

Congress of the United States
House of Representatives

January 21, 2014

Michael L. Connor
Commissioner
Bureau of Reclamation
U.S. Department of the Interior
1849 C Street NW
Washington, D.C. 20240

Dear Commissioner Connor:

I am writing regarding the U.S. Department of Interior's WaterSMART Water and Energy Efficiency Grant that will allow the City of Quincy to complete its Wastewater Reverse Osmosis Facility and Discharge Project, an integrated multi-water utility improvement project. This grant will allow the City of Quincy to complete its virtual closed loop ('one water') system that eliminates wastewater discharges with 100% beneficial reuse.

The U.S. Department of Interior's WaterSMART Water and Energy Efficiency Grant would enable the City of Quincy to reduce demand for potable water, eliminate discharge issues and Ecology's TDS concerns, and provide for long term increased growth capacity. Since 2007, the City of Quincy has secured $11.7 million in federal, state and local financial support for the overall wastewater project.

Please give the City of Quincy's grant request full and fair consideration.

Sincerely,

Doc Hastings
Member of Congress

DH: ss

Level	Title	Hourly Rate
D	Drafter	$69
	Accountant II	$83
E	Engineer I	$81
	Senior Drafter	$82
	Geologist/Hydrogeologist I	$70
	Scientist I	$75
	Project Analyst II	$85
	Word Processor	$86
F	Engineer II	$93
	Lead Drafter	$101
	Geologist/Hydrogeologist II	$83
	Scientist II	$87
	Project Analyst III	$90
	Technical Editor	$95
G	Engineer III	$112
	Senior Designer	$112
	Supervising Drafter	$117
	Geologist/Hydrogeologist III	$100
	Scientist III	$99
	Project Analyst Manager I	$107
H	Senior Engineer	$134
	Senior Geologist/Hydrogeologist	$126
	Senior Scientist	$125
I	Principal Engineer	$157
	Supervising Designer	$148
	Principal Geologist/Hydrogeologist	$142
	Principal Scientist	$158
J	Supervising Engineer	$184
	Supervising Geologist/Hydrogeologist	$183
	Supervising Scientist	$177
K	Managing Engineer	$212
	Managing Geologist/Hydrogeologist	$205
	Managing Scientist	$219
L	Chief Engineer	$260
	Executive Engineer	$260
	Chief Geologist/Hydrogeologist	$223
	Chief Scientist	$246
M	Vice President	$258
N	Senior Vice President	$227