FIRST LEVEL SCREENING – *WEEG 2015*

APPLICANT NAME: Bella Vista Water District	**CONTROL NUMBER:** 127
APPLICANT LOCATION: 11368 E. Stillwater Way, Shasta, CA, 96003	**TASK AREA:** A, B
PROJECT NAME: BVWD Renewable Energy- Advanced Metering Infrastructure	**BOR $:** 999,938 **Cost Share $:** 1,542,220

	SCREENING FACTOR	COMPLETE	COMMENTS
1	Eligibility requirements		
	• Eligible applicant in a Reclamation state	✓ YES __ NO	
	• 50% or more non-Federal cost share	✓ YES __ NO	
	• Authorized funding amount ($1 Million total – no more than $500,000 a year)	✓ YES __ NO	
	• Funding Group I or II	__ I ✓ II	
	• Length of project (9/30/17 – FG I or 9/30/18 – FG II)	✓ YES __ NO	
2	Proper format and length (75 pages)	✓ YES __ NO	
3	Proposal content		
	• SF-424 (authorized signature)	✓ YES __ NO	
	• SF-424B or SF-424D (authorized signature)	✓ YES __ NO	
	• Title page	✓ YES __ NO	
	• Table of contents	✓ YES __ NO	
	TECHNICAL PROPOSAL/EVALUATION CRITERIA (No More Than 50 Pages)		
	• Executive summary	✓ YES __ NO	
	• Background data	✓ YES __ NO	
	• Technical Project description	✓ YES __ NO	
	• Evaluation Criteria	✓ YES __ NO	
	• Project Benefits/Performance Measures	✓ YES __ NO	
	• Potential Environmental Impact Desc.	✓ YES __ NO	minimal
	• Required Permits/Approvals, if applicable	✓ YES __ NO	
	• Letters of Project Support	__ YES ✓ NO	
	• Official Resolution (Required 30 Days After)	__ YES ✓ NO	within 30 days
	PROJECT BUDGET		
	• Funding Plan	✓ YES __ NO	
	• Letters of Funding Commitment	__ YES ✓ NO	
	• Budget Proposal	✓ YES __ NO	
	• Budget Narrative	✓ YES __ NO	
	• SF-424A or SF-424C	✓ YES __ NO	

1st Level Screening Comments (Screening Committee Member):
Water metering + Renewable Energy Generation Facilities

Summary Comments (Grants Officer):

Applicant is eligible for consideration during the Second Level Evaluation phase ✓ **Yes** ____ **No**

Grants Officer _____ **Date** 1/28/15

WaterSMART Water and Energy Efficiency Grants for 2015 (R15AS00002)

Bella Vista Water District Renewable Energy, Advanced Metering Infrastructure and Water Conservation, Improvements

Bella Vista, California

Submitted by

Bella Vista Water District

11368 East Stillwater Way Redding, CA 96003

January 23, 2015

Project Manager: Don M. Groundwater, P.E.
dgroundwater@bvwd.org
(530) 241-1085 ext. 114
(530) 241-8354 (fax)

TABLE OF CONTENTS

	Page
Cover Page (Form SF-424)	submitted electronically
Assurances Form (Form 424C)	submitted electronically
Title Page	1
Table of Contents	2
Technical Proposal	
Executive Summary	3
Background Data	3
Technical Project Description	5
Evaluation Criteria	8
Project Schedule	15
Description of Performance Measures	16
Environmental and Cultural Resources Compliance	17
Required Permits and Approvals	18
Funding Plan	19
Official Resolution	20
Budget Proposal	
Budget Narrative	20
Budget Proposal (Table BP4)	23
Budget Form	submitted electronically

Attachments	No.
AWWA Water Audit for 2013	1
Beacon Advanced Metering Analytics	2
Badger Meter Technical	3
Solano - Smart Irrigation Controller Rebate Program	4
Renewable Energy Generation Information	5
Chinook Salmon Listing	6
Cleaning Solar Panels	7

TECHNICAL PROPOSAL

EXECUTIVE SUMMARY

Date: January 23, 2015
Applicant Name: Bella Vista Water District
City, County, State: Redding, Shasta County, California

The proposed project will conserve water, use water more efficiently, increase the use of renewable energy, protect endangered and threatened species in the northern portion of the Sacramento Valley, and reduce the emission of greenhouse gasses. The proposed improvements will increase the use of renewable energy through the installation of 500 kilowatts of solar power generation (off setting approximately 72% if the District's annual energy use). The project will conserve water and facilitate more efficient use of water through the installation of Advanced Metering Infrastructure (AMI) equipment on 400of the District's largest water users, replacement of 80 existing large meters with more accurate compound or magnetic flow meters, the provision of Smart Irrigation Controllers for the largest landscape irrigation customers, and making landscape irrigation audits available to customers having large landscape irrigation demands. The installation of AMI on 200 of the District's users will also significantly reduce the miles driven to read these meters every month. The purchase of a portable ultrasonic flow meter will enable the District to perform calibrations and verifications on the large meters at all of its wells and pump stations on a regular basis.

All project tasks can be completed within 36 months of the execution of a grant agreement. It is anticipated that tasks such as the installation the AMI equipment, and procurement of the portable ultrasonic flow meter can be completed in a relatively short time (less than 12 months). Other tasks, such as the construction of the solar power generation facilities, installation of new compound meters and "mag" flow meters; purchase, installation, and set up of smart irrigation controllers; and performing irrigation water audits will need a longer period of time to complete. However, it is anticipated that all tasks can be completed within 36 months. A small portion of the solar generation facilities will be located on the roofs of buildings that are Federal facilities.

BACKGROUND DATA

The District provides agricultural and municipal & industrial (M&I) water service to just over 6,000 customers in the eastern portion of the City of Redding and the unincorporated rural communities of Bella Vista and Palo Cedro located to the east of Redding (see Figure 1). The majority of the District's water supply (approximately 14,400 acre-feet annually, see Table 1 is provided through a Water Service Contract with the Bureau of Reclamation as part of Trinity Division of the Central Valley Project.

The District is a Central Valley Project Water Service Contractor, Contract No. 14-06-200- 851A-LTR1. Under the terms of the contract the District can divert up to 24,578 acre-feet of water

annually, subject to its availability. The District also has a long-term transfer agreement with the Anderson-Cottonwood Irrigation District (ACID) for 1,536 AF per year. In addition, the District has five groundwater wells capable of producing up to 3,000 AF annually. In a normal year approximately 60 percent of the water is utilized for municipal and industrial use (domestic use, commercial use, public institutional use and landscape irrigation) while 40 percent is used for agricultural uses.

Table 1
Bella Vista Water District
Annual Water Production

Water-Year	Water Production in AF
2004-05	18,764
2005-06	15,521
2006-07	16,605
2007-08	15,630
2008-09	16,428
2009-10	11,723
2010-11	11,385
2011-12	10,933
2012-13	13,183
2013-14	13,810
Average	**14,398**

In severe drought years like the 2014-15 water-year the amount of water that the District receives through its contract with Reclamation can be drastically cut. For the 2014-15 water-year the District was cut back to 50 percent of historical M&I use and received an allocation of zero percent irrigation water. In addition to running its wells for an extended period this year the District purchased 1,557 acre-feet of supplemental water from the ACID primarily for its agricultural customers. All of the District's agricultural customers cut back drastically on their water use with many choosing to fallow their pastures.

The wells are typically used only when the water in the Sacramento River is too turbid to treat efficiently, during years when Reclamation's contract deliveries are severely reduced (as was the case for the 2014-15 water-year), or when the Wintu Pump Station and/or Water Treatment Plant are out of service for repairs or major maintenance.

The District's water delivery system is completely piped and all water deliveries are metered. The water distribution system includes approximately 242 miles of pipeline varying in size from 4-inch diameter to 54-inches in diameter. The District currently has 6,063 metered services ranging in size from 5/8 inch to 10 inches. There are a total 5,864 are Municipal and Industrial customers; this includes 3,892 Residential customers, 1,626 Rural customers, 289 Commercial customers and 57 Public/Institutional customers. The remaining 199 customers are Agricultural customers (see Table 2).

Table 2
BVWD Metered Connections

Type	Active Accounts
Residential	3,892
Commercial	289
Rural	1,626
Public Institutional	57
Agricultural	199
TOTAL	**6,063**

In 2005 the District prepared a Water Master Plan that projected that the District's average annual demand would reach the existing contract quantity of 24,578 AF per year. During the past ten years (2004 through 2014) the contract water supply has been restricted to less than the full contract amount in four years (see Table 3). Total water production for the District has averaged approximately 14,800 AF over the past 10 years. Municipal and Industrial water use

accounts for approximately 60% of the water deliveries and Agricultural water use accounts for approximately 40% of the annual water use in an average year. For the 2013 calendar year non-revenue water was calculated to be approximately 9.2 percent using the AWWA's Water Audit software (see Attachment 1).

Table 3
Central Valley Project
Water Supply Allocations

Water Year	Agricultural Contractors	Urban Contractors
2005	100%	100%
2006	100%	100%
2007	100%	100%
2008	40%	75%
2009	40%	75%
2010	100%	100%
2011	100%	100%
2012	100%	100%
2013	75%	100%
2014	0%	50%

The District owns and operates nine pump stations, five groundwater wells, a surface water treatment plant, and its District Office Administrative and Maintenance facility. All of these facilities, especially the pump stations, are consumers of electricity. Pumping of water is a major expense for the District. Electrical energy use averages approximately one million kilowatt hours (1,000,000 kWh) annually and costs the District more than $200,000 a year.

Other than the Wintu Pump Station (a CVP facility that receives project power) the District's energy needs are currently met by a combination of PG&E and the City of Redding Electrical Utility. Two pump stations, two wells, and the District's Water Treatment Plant are served by the City of Redding Electrical Utility. The remaining seven pump stations, two wells, three water storage tanks, and the District's Main Office and Maintenance Yard are served by PG&E.

TECHNICAL PROJECT DESCRIPTION

The proposed project will increase the use of renewable energy through the installation of solar voltaic power generation facilities to offset much of the District's energy consumption. The District's goal is to meet approximately 72 percent of its electrical energy needs through the installation of solar voltaic generation equipment.

The proposed project will also promote water conservation by: (1) providing more accurate metering of water usage; (2) making on-line access to their daily water meter readings available to all agricultural irrigation and large landscape irrigation customers; (3) performing 100 plus landscape irrigation audits; and (4) installing smart irrigation controllers on large landscape irrigation accounts. The proposed project will also contribute to improved water management by: (1) the installation of more accurate meters on 80 of the larger irrigation services, (2) providing the District with real-time information on the water usage by the District's 200 largest water users.

Renewable Energy Generation Facilities

The proposed project will also increase the use of renewable energy through the installation of approximately 500 kilowatts of solar voltaic power generation equipment, enough to offset approximately 72 percent of the District's energy consumption. The District has sufficient areas

at its pump stations, main office, and water storage tanks to site this amount of solar generation equipment; however, it may be more economical to construct a single facility at one site and take advantage of PG&E's Renewable Energy Self-Generation Bill Credit Transfer (RES-BCT) program. This program allows local governments to generate electricity at one account and transfer any available excess bill credits (in dollars) to another account owned by the same local government. The District does have a 3.5 acre site that could accommodate the construction of a 500 kW facility.

Accurate Metering

The District will purchase and install magnetic or compound water meters on 80 of its larger services that have been identified as having highly variable flows. Highly variable flows require meters that are accurate over a broad range of flows. Magnetic flow meters and compound flow meters will provide much greater accuracy over a wide range of flows than the turbine and propeller meters that they will replace. The District will install of all of these new meters using District staff and equipment. Table 4 shows the sizes and types of meters that will be replaced. The project budget reflects replacement of the existing meters with similarly sized meters.

Prior to the installation of the new meters the District will review the irrigation needs of the parcels served by the meters to determine whether or not smaller meters would be appropriate. If appropriate, smaller meters would provide better water measurement accuracy at lower flows.

Table 4
Proposed Meter Replacements

Meter Manufacturer	Meter Type	Number
3-INCH		
MCCROMETER	Propeller	1
HERSEY	Turbine	12
ROCKWELL	Turbine	6
Subtotal		19
4-INCH		
ROCKWELL	Turbine	7
MCCROMETER	Propeller	1
HERSEY	Turbine	22
SENSUS	Turbine	3
SPARLING	Propeller	1
Subtotal		34
6-INCH		
MCCROMETER	Propeller	1
HERSEY	Turbine	15
SCHLUMBERGER	Turbine	1
SENSUS	Turbine	2
Subtotal		19
8-INCH		
HERSEY	Turbine	4
ROCKWELL	Turbine	2
SENSUS	Turbine	2
Subtotal		8
Grand Total		80

Advanced Metering Infrastructure

The District will purchase and install advanced metering infrastructure equipment for 200 of its largest agricultural and large irrigation meters. The advanced metering will automatically collect water usage data and enable both the District and customers with the AMI equipment on their water services easy access to their water consumption information. It can provide alerts to excess water use or continuous flow which may be due to water leaks thereby saving both precious water and reducing associated energy demands. It can also prevent customers from receiving large water bills due to undiscovered leaks in their plumbing systems.

In addition, should the meter fail and stop recording the AMI data would enable the District to both repair the meter in a timely manner and identify exactly when the meter stopped recording to enable better estimation of usage during the period of meter failure.

The AMI equipment's ability to detect and record reverse flows also provides a deterrent to water theft such as might occur if someone were to remove the meter and either install a pipe spool in its place or to reverse the meter so that the meter ran backwards. Note: Attachment 2 contains pricing information for Badger Meter's "Beacon Advanced Metering Analytics" equipment. In accordance with District procurement procedures the District will be requesting proposals from other vendors prior to making a final selection for the AMI equipment.

Landscape Irrigation Audits

As a part of the project the District will contract with a qualified irrigation auditor to perform pre- and post installation on the landscape irrigation audits that receive smart irrigation controllers as part of the project. The audits will also help identify potential water savings that can be achieved by improvements to the irrigation system design and its various components including irrigation zones, sprinkler placement, sprinkler types, nozzle sizes, landscaping materials, plant selection, and irrigation controllers. The project budget anticipates that the irrigation consultant will perform approximately 50 landscape irrigation audits. The audits will be targeted towards the District's largest landscape irrigation accounts and will include pre- and post- installation of the Smart Irrigation Controllers discussed in the next section.

Smart Irrigation Controllers

As part of the project the District will purchase and assist in the installation of approximately 25 smart irrigation controllers. Smart irrigation controllers automatically adjust based on local real-time weather and site conditions like rainfall, wind temperature, humidity, solar radiation, and soil type to apply just the right amount of water needed at just the right time. This allows for an accurate and customized watering schedule for a particular landscape.

The District will identify locations with large areas of landscape irrigation that have the highest potential to reduce their water consumption through the use of smart irrigation controllers. After the installation of the smart controllers and one irrigation season of use (assuming non-drought water allocations) the District will perform a post-installation analysis of the water usage to evaluate the benefits of installation of the smart irrigation controllers.

Portable Ultrasonic Flow Meter

As part of the project the District will acquire portable ultrasonic flow metering equipment. This equipment will enable the District to verify the accuracy of its production flow meters; pump station and zone flow meters; as well as the larger meters on its customers' services.

EVALUATION CRITERIA

Evaluation Criterion A: Water Conservation

*Up to **28 points** may be awarded for a proposal that will conserve water and improve efficiency. Points will be allocated to give consideration to projects that are expected to result in significant water savings.*

Subcriterion No. A.1: Quantifiable Water Savings

*Up to **24 points** may be allocated based on the quantifiable water savings expected as a result of the project.*

Over the past 10 calendar-years (including 2014, a severe drought year) the District's average annual water production has been approximately 13,300 acre-feet with metered water deliveries of approximately 12,100 acre-feet.

The following are the estimated water savings that will result from implementation of the recommended project elements:

1) Accurate Metering – The eighty accounts where more accurate water meters are proposed to be installed represent 52 percent (80 out of154) of the meters 3-inches to 8-inches in size have an estimated combined annual average water usage of approximately 2,500 acre-feet. More accurate water metering is estimated to result in an improvement in the registration of actual water use by approximately five percent (=125 acre-feet). Based on the water audit performed by the District for the 2013 calendar year "unaccounted for" was approximately 9.3 percent of the water production. The District has been working hard to get this number under 10 percent. However, with global warming and ever increasing demands on California's limited water supplies the District realizes that it must do everything it can to ensure that the water diverted from the Sacramento River is not wasted and is put to good use.

All of the District's water services are metered. The meters that will be replaced as part of the project are older (15 years or more) three to eight inch propeller and turbine meters. They will be replaced with new compound or magnetic meters that more accurately meter flows over a wide range of flows. The meters that will be replaced typically serve large irrigation demands as well as modest domestic water demands. The propeller and turbine meters are capable of accurately metering large flows; however, they cannot accurately measure low flows. For example the low flow accuracy limits for a 3-inch propeller meters is 40 gpm while it's 8 gpm for a 3-inch turbine meter. For 8-inch meters the low flow accuracy limits are 100 gpm and 50 gpm for propeller and turbine meters, respectively. AWWA meter testing requirements (from Table 5-3, page 64 of Manual of Practice M6-Water Meters - Selection, Installation, Testing, and Maintenance) illustrate the low flow limits of these meters (see Table 5). The low flow accuracies of compound meters range from ¼ to 1¼ gpm for 3-inch and 8-inch meters respectively, while they are 2 to 16 gpm, respectively, for 3-inch and 8-inch magnetic meters (See Attachment 3 - Badger Meter specifications).

More accurate meters would help the District reduce the amount of unaccounted for water by identifying water leakage in customer's water systems that typically occur at flow rates outside the range that can be accurately measured by 3-inch and larger turbine and propeller meters. It is estimated that more accurate metering of the largest water users could reduce the unaccounted for water by 1½ to 3 percent and result in an annual water savings of approximately 15 to 30 acre-feet. This estimate is based on the District's experience with previous meter replacement projects and the flow rates below which propeller and turbine meters accurately measure flows (see Table 5) for the minimum flow rates for these meters. To the extent that the registration of the actual water use results in the customers repairing leaks and being more diligent in the management of their water use (so as to keep their water bill from increasing) and more accurate measurement encourages additional water conservation to avoid spending more of their budget for water of usage, this could result in an estimated additional annual water savings of up to five percent (= 60 acre-feet).

Table 5
Meter Testing Requirements

Propeller Meters (AWWA C704)			
	Minimum Rate (New and Rebuilt)		Minimum (Repaired)
Size (inches)	Flow Rate (gpm)	Accuracy Limits	Accuracy Limits
3	40	98 - 102	90
4	50	99 - 102	90
6	90	100 - 102	90
8	100	101 - 102	90

Class II Turbihne Meters (AWWA C701)			
	Minimum Rate (New and Rebuilt)		Minimum (Repaired)
Size (inches)	Flow Rate (gpm)	Accuracy Limits	Accuracy Limits
3	8	98.5 - 101.5	---
4	15	98.5 - 101.5	---
6	30	98.5 - 101.5	---
8	50	98.5 - 101.5	---

In order to verify the actual water savings a representative sample of the meters that are removed for replacement will be flow tested using AWWA meter testing criteria. The accuracy of the meters at both the specified high and low flow rates will be compared with the accuracy of the replacement meters. Estimates of the meter losses will be made using the consumption history of the customer accounts for the respective meters that are tested.

2) Landscape Irrigation Audits – Irrigation audits can typically identify potential water savings of 15 to 25 percent or more. The fifty (50) largest water users will be targeted for landscape irrigation audits. The goal will be to provide landscape irrigation audits for twenty-five (25) of the largest users. According to the System Optimization Review performed in 2013 as part of a WaterSMART grant the top 50 water users in the District accounted for 41 percent of the water usage in the summer of 2012. On an annual basis they use approximately 2,600 acre-feet of water during a non-drought year. Based on audit of half of the top 50 users (using 1,300 acre-feet of water annually), achievement of a 10 percent savings as a result of performing water audits would result in an annual water savings of approximately 130 acre-feet of water. The District will tabulate the findings of the landscape irrigation audits to calculate the water savings achieved by implementation of the recommended repairs and changes to the irrigation practices.

3) Smart Irrigation Controllers – According to Reclamation's "Summary of Smart Controller Water Savings Studies" (Technical Memorandum No. 86-68210-SCAO-01) water savings varies greatly (from only a few percent to over 80 percent). It would be reasonable to anticipate water savings in the range of 10 to 20 percent. Using an average of 15 percent savings on 25 of the District's largest landscape irrigation accounts (with 1,300 acre-feet of annual water usage) has the potential to save approximately 200 acre-feet annually. Note: the savings from the landscape irrigation audits and the smart irrigation controllers would not be expected to be cumulative (i.e., the annual savings would not be 330 acre-feet). More likely they would be on the order of 15 to 20 percent (200 to 260 acre-feet annually). The water savings from the installation of smart irrigation controllers will be based on the findings of the landscape irrigation audits as well as comparing water usage before and after the installation of the controllers.

The District has surveyed many of its large institutional landscape irrigation customers (i.e., schools) regarding what types of irrigation controllers they currently use. The Survey found that the majority had either Hunter or RainBird irrigation controllers. Others had Irritrol and Orbit controllers. In many cases the existing controllers can be upgraded by adding modules to the controllers. For example most controllers can accommodate sensors that shut off irrigation during and for some period following a rain event. The District would plan to work through local irrigation supply companies to offer rebates for 50 percent of the cost of the smart irrigation controller (for any controllers tested under the Irrigation Association's Smart Water Application Technologies protocol ["SWAT-tested"]) using a program similar to one that Solano County has used (see Attachment 4)

Water conserved through the implementation of the above project elements would reduce the District's pumping from the Sacramento River as well as additional pumping by District Booster Pump Stations. Unaccounted for water and water being applied to the ground in excess of the irrigation requirements is ether lost through evapotranspiration or seeps into the ground where it may find its way into the local groundwater. The water conserved would remain in the Sacramento River for in-stream and downstream uses or in the case of well supplies remain in the local groundwater for future uses.

Subcriterion No. A.2: Percentage of Total Supply

*Up to **4 additional points** may be allocated based on the percentage of the applicant's total average water supply (i.e., including all facilities managed by the applicant) that will be conserved directly as a result of the project.*

Provide the percentage of total water supply conserved: State the applicant's total average annual water supply in acre-feet. Please use the following formula:

Estimated Amount of Water Conserved / Average Annual Water Supply

Estimated savings = 125+22.5+60+230 = 437.5
Average Annual Water Supply = 14,800
Percent Conserved = 3.0 percent

Evaluation Criterion B: Energy-Water Nexus (16 points)

*Up to **16 points** may be awarded based on the extent to which the project increases the use of renewable energy or otherwise results in increased energy efficiency.*

Subcriterion No. B.1: Implementing Renewable Energy Projects Related to Water Management and Delivery

*Up to **16 points** may be awarded for projects that include construction or installation of renewable energy components (e.g., hydroelectric units, solar-electric facilities, wind energy systems, or facilities that otherwise enable the use of renewable energy). Projects such as small-scale solar resulting in minimal energy savings or production will be considered under Subcriterion No. B.2 below.*

The proposed project will increase the use of renewable energy through the installation of approximately 500 kilowatts of renewable energy (solar voltaic) power generation equipment. The District has sufficient areas at its pump stations, main office, and water storage tanks to site this amount of solar generation equipment; however, it may be more economical to construct a single facility at one site and take advantage of PG&E's Renewable Energy Self-Generation Bill Credit Transfer (RES-BCT) program. This program allows local governments to generate electricity at one account and transfer any available excess bill credits (in dollars) to another account owned by the same local government. The District has received a budget proposal for the installation of 515 kilowatt at a single location. The District currently owns a 3.5 acre site that could accommodate the construction of a 515 kW facility. However, in accordance with District purchasing policies the District will solicit proposals for the installation of a total of approximately 500 kilowatt of solar generation with the option of installing it all at one location or at multiple locations.

Based on the District's average annual electrical energy usage over the past five years (=1,077,337 kilowatt-hours) and the estimated solar production provided by Halcyon Solar (see Attachment 5) of 775, 691kWh the solar equipment would offset approximately 72 percent of the District's energy demands. The environmental benefits of the solar-electric facilities (over 25 years) include:

CO_2 Offset:	16,650 tons
NO_x (which creates smog):	106,864 pounds
SO_2 (which creates acid rain):	96,738 pounds

This is the equivalent of 54,183,944 miles driven in an average car.

The water needs of the renewable energy will be minimal. The panels may need to be cleaned of dust and bird droppings during the non-rainy months to optimize energy production. However, one study by engineers at the University of California – San Diego found that cleaning of roof-mounted panels was not worth the cost (see Attachment 6). If the panels are ground

mounted they can be cleaned with window cleaning equipment requiring only a few buckets of water every month or two.

Subcriterion No. B.2: Increasing Energy Efficiency in Water Management

*If the project is not implementing a renewable energy component, as described in Subcriterion No. B.1 above, up to **4 points** may be awarded for projects that address energy demands by retrofitting equipment to increase energy efficiency and/or through water conservation improvements that result in reduced pumping or diversions.*

The project addresses Subcriterion No. B.1.

Evaluation Criterion C: Benefits to Endangered Species (12 points)

*Up to **12 points** may be awarded for projects that will benefit federally-recognized candidate species or up to **12 points** may be awarded for projects expected to accelerate the recovery of threatened or endangered species, or addressing designated critical habitat.*

The diversion of water from the Sacramento River at the Wintu Pump Station (a Reclamation constructed and owned facility) and at other diversions from the river and its tributaries reduces the amount of water flowing in the river and the amount of water that can be kept in storage behind Shasta Dam. To the extent that the project conserves water within the District the project will benefit federally-recognized candidate species, threatened species and endangered species in the Sacramento River and other local waterways.

The Sacramento River system supports four separate runs of Chinook salmon: fall-, late fall-, winter-, and spring-run. The adult populations of the four runs of salmon and other important fish species that spawn in the upper Sacramento River have considerably declined over the last 40 years. Several fish species in the upper Sacramento River have been listed under the Federal Endangered Species Act: Sacramento River winter-run Chinook salmon (endangered), Central Valley spring-run Chinook salmon (threatened), Central Valley steelhead (threatened), and the Southern Distinct Population Segment of North American green sturgeon (threatened). Two of these species are also listed under the California Endangered Species Act: Sacramento River winter-run Chinook salmon (endangered) and Central Valley spring-run Chinook salmon (threatened). All of the species would benefit from lowered diversions by the District.

Evaluation Criterion D: Water Marketing (12 points)

*Up to **12 points** may be awarded for projects that propose developing a new water market. Note: Water marketing does **not** include an entity selling conserved water to an existing customer. This criterion is intended for the situation where an entity that is conserving water uses water marketing to make the conserved water available to meet other existing water supply needs or uses.*

Water Marketing. The Advance Metering portion of the project will not directly develop new water markets; however, it will provide the District opportunities to track customer water usage and may allow the identification of new needs for water markets in the future. The ability to track usage patterns for large agricultural, residential, rural, institutional, commercial, and landscape irrigation customers will assist the District in planning for and developing future water marketing opportunities with neighboring water providers like the City of Redding and the City of Shasta Lake. It will also provide valuable information for planning and measuring the effectiveness of the District's water conservation efforts.

Evaluation Criterion E: Other Contributions to Water Supply Sustainability (14 points)
*Up to **14 points** may be awarded for projects expected to contribute to a more sustainable water supply. This criterion is intended to provide an opportunity for the applicant to explain 1) how the project relates to a completed **WaterSMART Basin Study**; 2) how the project could expedite future **on-farm improvements**; 3) how the project will **build resiliency to drought**; and/or 4) how the project will provide **other benefits to water supply sustainability** within the basin. An applicant may receive the **maximum 14 points** under this criterion based on discussion of one or more of the numbered sections below.*

Subcriterion E.1: Addressing Adaptation Strategies in a WaterSMART Basin Study
*Up to **14 points** may be awarded for projects that address an adaptation strategy identified **in a completed WaterSMART Basin Study.***

According to Reclamation's website the Sacramento – San Joaquin Rivers Basin Study was funded in 2012. However, the study is still underway. According to the September 25, 2014, press release on the study "Building on previous and ongoing work in the Sacramento, San Joaquin and Tulare Lake basins, the study is projected to be completed in spring 2015."

Subcriterion E.2: Expediting Future On-Farm Irrigation Improvements
*Up to **14 points** may be awarded for projects that describe in detail how they will directly expedite future **on-farm irrigation improvements**, including future on-farm improvements that may be eligible for NRCS funding.*

The project does not address this subcriterion.

Subcriterion E.3: Building Drought Resiliency
*Up to **14 points** may be awarded for projects that will **build long-term drought resilience** in an area affected by drought.*

The project does not address this subcriterion.

Subcriterion E.4: Other Water Supply Sustainability Benefits
*Up **10 points** may be awarded for projects that include other benefits to water supply sustainability.*

The Advanced Metering Infrastructure portion of the project will make important contributions to sustainability of the District's water supply. By targeting some of the Districts largest irrigation users, the District will be able to make timely adjustments to account for drought conditions by having the ability through the Advanced Metering Infrastructure system to target the biggest users and request/provide incentives for reduced use during high demand periods or other water emergencies. The District will be able to see in near real-time whether customers are responding to calls for voluntary or mandatory water cutbacks. This tool will help ensure that the District has tools to address water supply shortages whenever the need arises.

The District will use the Advanced Metering Infrastructure project as a tool to teach the importance of water conservation and educate its agricultural, residential, rural, public institutional, landscape irrigation customers how to take a proactive role in their water usage by taking advantage of the computerized interface and other tools the Advanced Metering Infrastructure system will provide.

The construction of the Renewable Energy Generation Facilities will serve as an example for community and other water agencies of what is and can be done by a local agency to provide sustainable energy. Many agencies are unaware of the opportunity available under the Renewable Energy Self-Generation Bill Credit Transfer (RES-BCT) program. There is currently much misinformation regarding solar generation opportunities for local water agencies even among companies that promote solar generation (and even within PG&E's solar division). The ability to generate energy at one location and offset energy bills at another location is not widely understood. The District will get the word out regarding the availability and benefits of the RES-BCT program to sister agencies within the water community and share its experiences through water industry associations like the American Water Works Association and the Association of California Water Agencies.

Evaluation Criterion F: Implementation and Results (10 points)

Subcriterion No. F.1: Project Planning
Points may be awarded for proposals with planning efforts that provide support for the proposed project.

In 2013 the District completed a System Optimization Review under a WaterSmart grant. The study looked at opportunities for energy savings related to the operation of the District's water system. It concluded "*...it is apparent that the District already operates a relatively efficient system, as there is no obvious alternative that could be easily implemented and result in immediate significant cost savings.*"

The District is in the process of finalizing its 2012 Federal Water Management Plan and is also has a consultant working on its Urban Water Management Plan. Both of these should be completed within the next couple of months. A key component of the Urban Water Management Plan will be the updating of the District's water shortage contingency plan. The Advanced Metering Infrastructure and Accurate Metering components of the project will greatly

assist the District in meeting water conservation goals set by the State and Reclamation.

Subcriterion No. F.2: Readiness to Proceed

Points may be awarded based upon the extent to which the proposed project is capable of proceeding upon entering into a financial assistance agreement.

The District is ready to proceed with all phases of the project. With the exception of the construction and installation of the Renewable Energy Generation Facilities, District forces will perform all of the work required for the installation of the Accurate Metering and Advanced Metering Infrastructure portions of the project. The AMI portion of the project will be completed early on in the project schedule. The Accurate Metering component of the project will be accomplished over the length or the three-year grant. Landscape irrigation audits will be performed by a consultant and coordinated with the rebate program for Smart Irrigation Controllers. Since the District currently does not sponsor any rebate programs, this will require the development and adoption of a program similar to Solano County's program. Based on a July notification date regarding award of the grant, this program should be able to start in the spring of 2016. Acquisition of the Portable Ultrasonic Flow Meter should be able to be accomplished within weeks of the execution of the grant agreement.

The construction of the Renewable Energy Generation Facilities will require the completion of CEQA and/or NEPA environmental studies. It is anticipated that any required environmental studies that are required for the project can be completed by late spring 2016 and that construction would be able to get underway early summer 2016. Construction of the facilities will be phased in to meet both District cash flow and grant funding requirements. See Poject Schedule below.

Project Schedule

Task No.	Major Project Tasks	Quarters 2015				Quarters 2016				Quarters 2017				Quarters 2018				
		1st	2nd	3rd	4th	1st	2nd	3rd	4th	1st	2nd	3rd	4th	1st	2nd	3rd	4th	
1	Execute Grant Agreement with Reclamation																	
2	Renewable Energy Generation Facilities																	
2.1	CEQA & NEPA Compliance																	
2.2	Develop Bid Proposal																	
2.3	Bid, Award and Execute Construction Contract																	
2.4	Construction - Phase 1																	
2.5	Construction - Phase 2																	
3	Accurate Metering																	
4	Advanced Metering Infrastructure																	
4.1	Develop Bid Proposal																	
4.2	Bid, Award and Execute Contract																	
4.3	Installation, Training & Startup																	
5	Landscape Irrigation Audits																	
6	Smart Irrigation Controllers																	
7	Portable Ultrasonic Flow Meter																	
		2015-16 Fed. Fiscal Year				2015-16 Federal Fiscal Year				2016-17 Federal Fiscal Year				2017-18 Federal Fiscal Year				18-19

DESCRIPTION OF PERFORMANCE MEASURES

Subcriterion No. F.3: Performance Measures
Points may be awarded based on the description and development of performance measures to quantify actual project benefits upon completion of the project.

The District will use the following performance measures to evaluate the project:

Task 1 –Renewable Energy Generation Facilities – The energy generation facilities will be metered providing a quantitative measurement of the performance of the facilities. Another performance measure will be energy costs. These will be monitored against prior years' billings as well as against calculated billings if the District had to buy the energy from PG&E.

Task 3 – Accurate Metering - The District will compare water usage prior to the installation of the new metering equipment with water usage post-installation. Water demands will be adjusted to reflect any changes in the areas being irrigated and changes in water requirements due to year to year differences in the weather.

Task 4 - Advanced Metering Infrastructure - After project completion as follows:
Amount of water conserved. This will be measured by having District staff review water usage reports for the parcels with AMI for comparable water years. (Note: under the District's current declared Water Shortage Emergency mandatory water conservation is in effect). If the 2015-16 Water-year is under similar water delivery allocations, usage post AMI meter installation in the 2016-17 Water-year can be compared to the 2015-16 water-year. Otherwise, comparisons will need to be made to a similar water-year. This will allow the District to evaluate the actual amount of acre feet per year saved as a result of the AMI project installation.

Amount of water losses mitigated/unaccounted for water recuperated. District staff will review water usage reports as well as review water bills for the AMI project service territory to ascertain the reduction in water losses and unaccounted for water that has been recuperated in relation to the AMI Project.

Amount of metering readings hours reduced. The District will compare staff costs and vehicle miles driven with previous years to calculate budget savings attributable to the AMI project.
Task 5 - Landscape Irrigation Audits - The audits will identify steps that the property owner can take to reduce their water consumption and provide recommendations for irrigation controller settings for the properties. After one year the District will perform comparisons between past water usage and water usage following the water audits (assuming similar water supply availability and ET demands). In addition, the District will compare water usage against the water budget established for each property.

Task 6 - Smart Irrigation Controllers – Similar to Task 5, after one year the District will perform comparisons between past water usage and water usage following the installation of the smart

controllers.

Task 7 – Portable Ultrasonic Flow Meter – The portable ultrasonic flow meter will be used to verify and/or calibrate existing production meters on wells and discharge meters on pump stations. Readings on the existing meters will be compared with the readings on the meters at District facilities providing immediate feedback on the accuracy of the existing meters and identifying any needed recalibrations or replacements for the existing meters.

ENVIRONMENTAL COMPLIANCE

Roof mounted solar energy systems are exempt from CEQA provided that they are located on the roof of either an existing building or on an existing parking lot. Installation of a large ground mounted solar energy system will require compliance with CEQA and NEPA. NEPA compliance will be required if the system will be located on Federal properties. District staff has performed preliminary site surveys of the proposed locations and does not anticipate any significant environmental impacts associated with the construction of the facilities. In addition to CEQA and NEPA compliance the District will need to obtain permits from Shasta County and comply with PG&E interconnection requirements. Should the District's grant application be approved, the District will initiate the CEQA, NEPA, County and PG&E permitting in order to avoid delays in project construction. FERC licensing is not required for the project.

Environmental and Cultural Resources Compliance Questions & Responses

1) *Will the project impact the surrounding environment (e.g., soil [dust], air, water [quality and quantity], animal habitat)? Please briefly describe all earth-disturbing work and any work that will affect the air, water, or animal habitat in the project area. Please also explain the impacts of such work on the surrounding environment and any steps that could be taken to minimize the impacts.*
   The construction of ground mount portions of the project will require digging of small diameter (6-inch) holes, similar to post holes, for the supports for the solar panels. In addition there will be some trenching required for the installation of electrical conduits for the system. This may create a small amount of dust but can easily be mitigated using standard dust control measures. There should be no impacts to water quality (standard erosion control measures will be used to prevent erosion and runoff from the construction site. The proposed site has been heavily grazed in the past and is not critical habitat for animals.

2) *Are you aware of any species listed or proposed to be listed as a Federal threatened or endangered species, or designated critical habitat in the project area?*
   The District is not aware of any listed or proposed to be listed endangered species or critical habitat in the project area.
   If so, would they be affected by any activities associated with the proposed project? N/A.

3) *Are there wetlands or other surface waters inside the project boundaries that potentially fall under CWA jurisdiction as "waters of the United States?"*
   No, there are no wetlands or other surface waters inside the project boundaries that potentially

fall under CWA jurisdiction.
If so, please describe and estimate any impacts the project may have. N/A.

4) *When was the water delivery system constructed?*
The major elements of the District's water system were constructed in 1965 and many additions to the system have occurred since that time.

5) *Will the project result in any modification of or effects to, individual features of an irrigation system (e.g., headgates, canals, or flumes)?*
No modifications will be made on any of the individual features of the irrigation system.
If so, state when those features were constructed and describe the nature and timing of any extensive alterations or modifications to those features completed previously. N/A.

6) *Are any buildings, structures, or features in the irrigation district listed or eligible for listing on the National Register of Historic Places?*
No, not at this time. The project is still less than 50 years old.
A cultural resources specialist at your local Reclamation office or the State Historic Preservation Office can assist in answering this question.
7) *Are there any known archeological sites in the proposed project area?*
A survey of the site in conjunction with the District's 1990 Water Master Plan did not reveal any archeological sites within the project area.
8) *Will the project have a disproportionately high and adverse effect on low income or minority populations?*
No, the project should not have any adverse effects on any populations.
9) *Will the project limit access to and ceremonial use of Indian sacred sites or result in other impacts on tribal lands?*
No, project will not limit access to and ceremonial use of Indian sacred sites or result in other impacts on tribal lands
10) *Will the project contribute to the introduction, continued existence, or spread of noxious weeds or non-native invasive species known to occur in the area?*
No, the project will have minimal impacts and will not contribute to the introduction, continued existence, or spread of noxious weeds or non-native invasive species known to occur in the area

REQUIRED PERMITS AND APPROVALS

The District anticipates that permits will be required only for the Renewable Energy Generation Facilities task. This is due to the fact that the meters will be replacing existing meters, the AMI system does not require the installation of any new facilities, the Smart Irrigation Controllers are standard components of irrigation systems and will be installed by the property owners, and the remaining tasks are not subject to environmental, city or county permitting.

The only task will require permitting is the Renewable Energy Generation facilities. They will require varying degrees of permitting based on their location.

Subcriterion No. F.4: Reasonableness of Costs
Points may be awarded based on the reasonableness of the cost for the benefits gained.

The project provides many benefits including water conservation, better water management, information (from both irrigation audits and the AMI system) for customers to manage their water consumption. It is hard to put dollars to each of these benefits. However, the cost /benefit for the Renewable Energy Generation Facilities is easy to quantify. Based on the numbers provided by Halcyon Solar the annual savings on the District's electrical bill will be approximately $109,000 resulting in a 10.7 year payback before taking into account escalating energy costs. They have estimated a savings of $3,574,876 over 25 years.

Evaluation Criterion G: Additional Non-Federal Funding (4 points)
*Up to **4 points** may be awarded to proposals that provide non-Federal funding in excess of 50 percent of the project costs. State the percentage of non-Federal funding provided.*

Non-Federal Funding/ Total Project Cost = $ $1,842,221/ $2,842,158 = 64.8%

Evaluation Criterion H: Connection to Reclamation Project Activities (4 points)
*Up to 4 **points** may be awarded if the proposed project is in a basin with connections to Reclamation project activities. No points will be awarded for proposals without connection to a Reclamation project or Reclamation activity.*

1. As previously mentioned, the District has a Water Service Contract with Reclamation.
2. The vast majority of water delivered by the District is CVP water delivered through Reclamation owned facilities.
3. The project may involve construction on Reclamation lands or Reclamation facilities if any of the solar facilities end up being constructed at either the District's main office and maintenance yard or at the Regulating Station both of which are Reclamation facilities located on Reclamation land.
4. The District has successfully completed several WaterSMART projects over the last 5 years including a System Optimization Review in 2013.
5. All of the project elements will take place in the Redding basin which includes a number of Reclamation contractors and facilities.
6. The water conserved and better managed as a result of the proposed project will contribute to the Sacramento River basin, a basin with numerous Reclamation facilities.

FUNDING PLAN

The District intends to fund its share of the project costs as part of the District's FY2015-16, FY2016-17 and FY2017-18 Budgets (which cover the period from July 1, 2015 through June 30, 2016, July1, 2016 through June 30, 2017,and July1, 2017 through June 30, 2018 respectively). Currently the District has not applied for funding nor does it anticipate receiving funding from any other funding partners. Funding for the project will come from District reserves.

OFFICIAL RESOLUTION

The District is unable to submit an official resolution by the application deadline due to the timing of the District's Board meetings and the notice required to put the resolution on the agenda for consideration by the Board of Directors. District staff will present the required official resolution to its Board of Directors at the next Board meeting in early February and forward it on to Reclamation following Board approval.

BUDGET PROPOSAL

BUDGET NARRATIVE

A detailed Project Budget is presented in Table BP-4. The estimated Total Project Cost is approximately $2.8 million. The District's share of the costs will be approximately $1.8 million or64.6% of the Total Project Costs while Reclamation's share of the project costs will be just under $1.0 million. The District currently has sufficient funds in its reserves to fund the District's share of the project; therefore, there are currently no constraints on the availability of funds. No in-kind contributions are included in the budget proposal and no project costs have been occurred to date.

Salaries and Wages

The project will be managed by Don Groundwater, the District Engineer for Bella Vista Water District. Bud Wanbaugh, the District's Water Distribution, will manage the District's construction activities. Field work will be accomplished by staff from the Water Distribution Department. Construction of the renewable energy facilities will be inspected and coordinated by the Randy Olsen, District's Electrical & Instrumentation Technician. A breakdown showing the estimated hours for each and their hourly rates are included in the Table BP-4 – Budget Proposal.

Employer Taxes and Fringe Benefits

Taxes and fringe benefits are calculated at a rate of 95 percent of salaries and wages of the District staff that will be involved with this project Included in fringe benefits are paid time off and the following that are calculated as a percentage of gross wages: Social Security taxes at 6.2%, Medicare at 1.45%, State Disability Insurance at 1.1 %, the District's contribution to employee retirement benefits is calculated at 13.755%, and workers' compensation insurance at 2.39% of salaries and wages. In addition District-paid benefits are estimated at following annual amounts per employee: state unemployment insurance and employment training tax at $210, health insurance premiums $20,000, secondary insurance at $1,350, life insurance at $215, vision insurance at $335, and dental insurance at $1,000. The total cost of all of the listed taxes and fringe benefits is approximately 95 percent of total payroll. The calculated total fringe benefits is included in the Table BP-4 – Budget Proposal.

Travel
It is not anticipated that there will be any need to for travel related to this project; therefore, no expenses for travel are included in the budget for the project

Equipment
Equipment to be purchased under the project include two new handheld meter reader, AMI registers, capable of reading the new ERTs, an upgrade to the District's meter reading software, twenty-five smart irrigation controllers, and a portable ultrasonic meter. The cost of each piece of equipment is included in the Table BP-4 – Budget Proposal.

Contractual
The District will be contracting with solar energy contractor for the construction of the renewable energy generation facilities. A budget level estimate for the solar facilities was obtained in order to provide costs for this submittal. Proposals will be requested from multiple qualified solar installation companies if this project is approved for funding.

A certified landscape auditor will be to perform the water audits. Hourly rates were requested from several local irrigation auditors for the preparation of this grant request.

The AMI system will require staff training and setup by the AMI provider. A cost quotation was requested from the District's current meter provider. The costs for setup and training are included in the budget.

A breakdown of contractual costs are included in the Table BP-4 – Budget Proposal.

Supplies/Materials

The costs included in the project budget were estimated based on past experience for meter replacements and in addition to the meter costs include all parts and materials required for the installation. A breakdown showing the quantities and costs different sized meter replacements is included in the Table BP-4 – Budget Proposal.

Environmental and Regulatory Compliance Costs
Costs for environmental compliance include the estimated costs for CEQA and NEPA compliance and are based on a recent pipeline replacement project as part of a highway project that received Federal funding. These costs are included in the Table BP-4 – Budget Proposal.

Reporting
The cost to comply with reporting requirements including the financial reports, program performance reports, and significant development reports has been included in the estimated number of hours under salaries and wages for the District Engineer. These costs are included in the Table BP-4 – Budget Proposal.

Other

A 10 percent contingency has been budgeted under "Other" to allow for unforeseen expenses. The contingency amount is 100% funded by the District. These costs are included in the Table BP-4 – Budget Proposal.

Table BP-1—Summary of non-Federal and Federal funding sources

Funding sources	Funding amount
Non-Federal entities	
Bella Vista Water District	$ 1,842,220
Non-Federal subtotal:	$ 1,842,220
Other Federal entities - none	$ 0
Other Federal subtotal:	$ 0
Requested Reclamation funding:	$ 999,938
Total project funding:	$ 2,842,158

Table BP-2.—Funding Group II funding request

Funding Group II request				
	Year 1 (FY 2015)	Year 2 (FY 2016)	Year 3 (FY 2017)	Total
Federal Funding requested	$ 500,000	$ 400,000	$ 99,938	$ 999,938

Table BP-3—Funding Sources

Funding Sources	Percent of Total Project Cost	Total Cost by Source
Recipient Funding	64.8%	$ 1,842,220
Reclamation Funding	35.2%	$ 999,938
Other Federal Funding	0.0%	$ -
Totals		$ 2,842,158

Table BP-4 Budget Proposal

Budget Item Description	Computation			Extension	Recipient Funding	Reclamation Funding	Total Cost
	$/Unit	Units	Quantity				
Salaries And Wages							
District Engineer	$ 54.00	hr	300	$ 16,200	$ 16,200	$ -	$ 16,200
Distribution Superintendent	$ 40.00	hr	400	$ 16,000	$ 16,000	$ -	$ 16,000
Electrical & Instrumentation Tech.	$ 36.00	hr	200	$ 7,200	$ 7,200	$ -	$ 7,200
Water Distribution Operators	$ 26.00	hr	1,000	$ 26,000	$ 26,000	$ -	$ 26,000
Subtotal				$ 65,400	$ 65,400	$ -	$ 65,400
Fringe Benefits							
Full-Time Employees @ 95%	95%	of S&W	$ 65,400	$ 62,130	$ 62,130	$ -	$ 62,130
Travel							
None							
Equipment							
New Handheld Meter Reader	$ 5,000	each	2	$ 10,000	$ 5,500	$ 4,500	$ 10,000
Advanced Meter Reading Registers	$ 280	each	200	$ 56,000	$ 30,800	$ 25,200	$ 56,000
Smart Irrigation Controllers	$ 350	each	25	$ 8,750	$ 4,813	$ 3,938	$ 8,750
Portable Ultrasonic Meter	$ 7,500	L.S.	1	$ 7,500	$ 4,125	$ 3,375	$ 7,500
Supplies/Materials							
3-inch Meters & Fittings	$ 2,800	each	19	$ 53,200	$ 29,260	$ 23,940	$ 53,200
4-inch Meters & Fittings	$ 4,000	each	34	$ 136,000	$ 74,800	$ 61,200	$ 136,000
6-inch Meters & Fittings	$ 5,100	each	19	$ 96,900	$ 53,295	$ 43,605	$ 96,900
8-inch Meters & Fittings	$ 7,800	each	8	$ 62,400	$ 34,320	$ 28,080	$ 62,400
Contractual/Construction							
Solar Electric Power Systems	$ 2,000,000	L.S.	1	$ 2,000,000	$ 1,200,000	$ 800,000	$ 2,000,000
Irrigation Consultant	$ 75	hr	100	$ 7,500	$ 5,000	$ 2,500	$ 7,500
Setup and Training on AMR Equip.	$ 8,000	L.S.	1	$ 8,000	$ 4,400	$ 3,600	$ 8,000
Environmental and Regulatory	$ 10,000	L.S.	1	$ 10,000	$ 10,000	$ -	$ 10,000
SUBTOTALS					$ 1,583,843	$ 999,938	$ 2,583,780
Other							
Contingencies @ 10%	10%	of Subtotal	2,583,780	$ 258,378	$ 258,378	$ -	$ 258,378
Total Direct Costs							
Indirect Costs - 0%							
Total Project Costs					$ 1,842,220	$ 999,938	$ 2,842,158
Share of Project Costs					64.8%	35.2%	100.0%

Figure 1

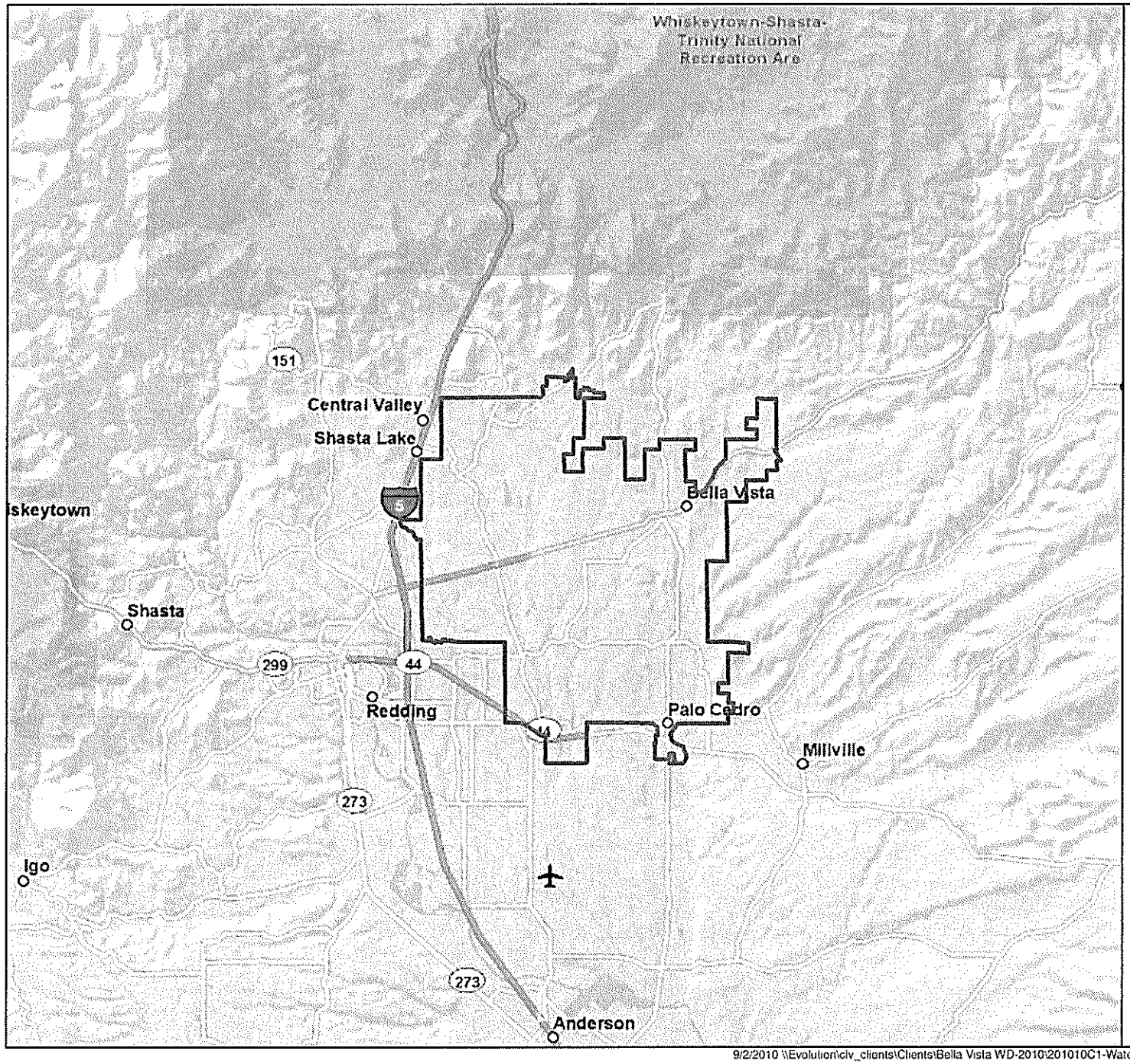

Bella Vista Water District

Legend

Bella Vista WD

District Vicinity

0 0.5 1 1.5 2 2.5
Miles

PROVOST& PRITCHARD
CONSULTING GROUP
An Employee Owned Company

2505 Alluvial Ave
Clovis , CA . 93611
(559) 326-1100

9/2/2010 \\Evolution\civ_clients\Clients\Bella Vista WD-2010\201010C1-Water Management Plan\GIS\Map\attachment_location.mxd

Attachment 1 - AWWA Water Audit - BVWD Water Balance

AWWA WLCC Free Water Audit Software: Water Balance

Copyright © 2010, American Water Works Association. All Rights Reserved.

WAS v4.2

Water Audit Report For:	Report Yr:
Bella Vista Water District	2013

Own Sources (Adjusted for known errors) 13,674.000	Water Exported 2.000			Billed Water Exported	
	Water Supplied 13,672.000	Authorized Consumption 12,588.900	Billed Authorized Consumption 12,415.000	Billed Metered Consumption (inc. water exported) 12,414.000	Revenue Water 12,415.000
				Billed Unmetered Consumption 1.000	
			Unbilled Authorized Consumption 173.900	Unbilled Metered Consumption 3.000	Non-Revenue Water (NRW) 1,257.000
				Unbilled Unmetered Consumption 170.900	
		Water Losses 1,083.100	Apparent Losses 96.577	Unauthorized Consumption 34.180	
				Customer Metering Inaccuracies 62.397	
				Systematic Data Handling Errors 0.000	
Water Imported 0.000			Real Losses 986.523	Leakage on Transmission and/or Distribution Mains Not broken down	
				Leakage and Overflows at Utility's Storage Tanks Not broken down	
				Leakage on Service Connections Not broken down	

Badger Meter

Recordall® Compound Series Meter

Cold Water Bronze & Lead-Free Alloy Meter
NSF/ANSI Standard 61 Certified, Annex G

DESCRIPTION

Badger Meter Recordall® Compound Series meters combine two metering technologies in one innovative package. A positive displacement chamber measures low flow, while a turbine chamber records high flow.

Offered in four sizes, the Compound Series meter features:

- Patented design that eliminates the need for a trigger valve and maintains crossover accuracy.
- Sealed, multi-position register that protects against dirt, moisture and tampering—and eases installation and reading.
- Straight-reading odometer-type totalization display, 360° test circle with center sweep hand and flow finder to detect leaks.
- Compatibility with a range of automatic meter reading systems.

Badger Meter ORION® and GALAXY® AMR/AMI meter reading systems are available for all Compound Series meters. Itron® ERT reading systems are also available. An optional summator can be provided as an integral part of the register assembly. All register options are removable from the meter without disrupting water service.

APPLICATIONS

Use the Recordall Compound meter for measuring potable cold water in commercial and industrial applications where flow is in one direction only. The meter is an ideal choice for facilities that experience rapid and wide fluctuations in water demand, such as hospitals, universities, residential complexes and manufacturing or processing facilities.

Compound Series meters are available in cast bronze or a lead-free alloy and comply with NSF/ANSI Standard 61, Annex G. The meters carry the NSF-61 Mark, Trade Designation: Compound Series LL-NS.

OPERATION & PERFORMANCE

At low flow rates, the Compound Series meter diverts water up through a bypass to the disc chamber. Leaving the chamber's outlet port, water flows beyond the turbine element and main valve. As the flow rate increases, a pressure differential is created that opens the main valve. The water then flows straight through the turbine chamber. In addition, a portion still flows through the disc chamber before exiting the meter.

Rotor and disc movements are transmitted by magnetic drive couplings to individual register odometers. The direct magnetic drive provides a positive, reliable and dependable register coupling for straight-reading or remote reading options. And the self-lubricating thermoplastic register gearing is designed to minimize friction and provide long life.

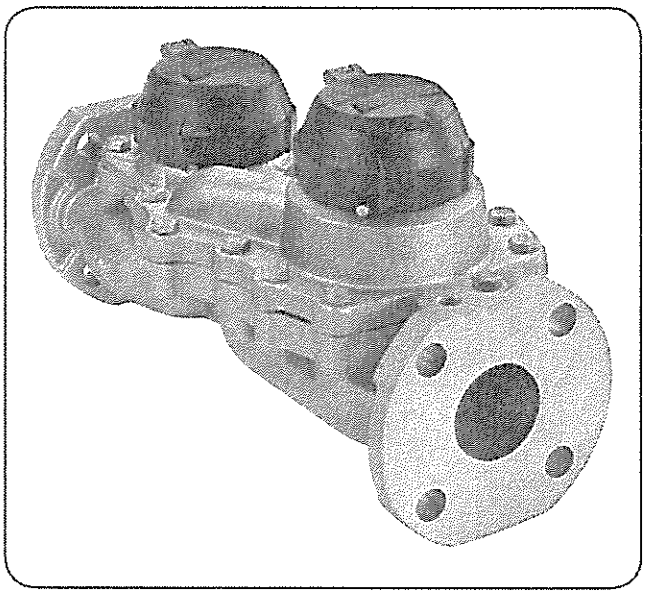

The Recordall Compound Series meets or exceeds registration accuracy for low, normal operating, maximum continuous operation, and changeover flow rates as specified in AWWA Standard C702.

CONSTRUCTION

The Recordall Compound Series meter's construction complies with ANSI and AWWA C702 standards. It consists of three basic components: meter housing, interchangeable measuring elements, and sealed direct reading registers. The measuring element consists of the disc measuring chamber, turbine head assembly, and high flow valve assembly. To simplify maintenance, the registers and measuring elements can be removed without removing the meter housing from the line.

METER INSTALLATION

The meter is designed for installations where flow is in one direction only. A separate strainer is required to ensure optimum flow conditioning and protection of the measuring element. Companion flanges for installation of meters on various pipe types and sizes are available in cast iron or bronze as an option.

SPECIFICATIONS

Compound Series Model	2" (50 mm)	3" (80 mm)	4" (100 mm)	6" (150 mm)
Meter Flanges, Class 150	2" elliptical or round	3" round	4" round	6" round
	(50 mm)	(80 mm)	(100 mm)	(150 mm)
Typical Operating Range (100% ± 1.5%)	0.5…200 gpm (0.1…45 m³/h)	0.5…450 gpm (0.1…102 m³/h)	0.75…1000 gpm (0.17…227 m³/h)	0.75…2000 gpm (0.17…454.4 m³/h)
Low Flow Registration (97% minimum)	0.25 gpm (0.06 m³/h)	0.25 gpm (0.06 m³/h)	0.375 gpm (0.09 m³/h)	0.375 gpm (0.09 m³/h)
Maximum Continuous Flow	170 gpm (38.3 m³/h)	400 gpm (90.3 m³/h)	800 gpm (181.6 m³/h)	1500 gpm (340.5 m³/h)
Pressure Loss at Maximum Continuous Flow	5.4 psi at 170 gpm (0.38 bar at 38.3 m³/h)	6.0 psi at 400 gpm (0.41 bar at 90.3 m³/h)	11.0 psi at 800 gpm (0.75 bar at 181.6 m³/h)	9.3 psi at 1500 gpm (0.64 bar at 340.5 m³/h)
Crossover Flow Rate, Typical	12 gpm	12 gpm	20 gpm	30 gpm
Pressure Loss at Crossover	3.5 psi (0.24 bar)	4.0 psi (0.28 bar)	4.0 psi (0.28 bar)	5.0 psi (0.35 bar)
Minimum Crossover Accuracy	97%	97%	97%	95%
Maximum Operating Pressure	150 psi (10 bar)			
Maximum Operating Temperature	105° F (41° C)			
Register Type	Odometer-type, straight reading, permanently sealed magnetic drive standard. Automatic meter reading systems are optional.			
High Flow Registration	100,000,000 100 gal/sweep hand revolution			1,000,000,000 1000 gal/sweep hand revolution
	10,000,000 10 ft3/sweep hand revolution			100,000,000 100 ft³/sweep hand revolution
	1,000,000 1m³/sweep hand revolution			10,000,000 10 m³/sweep hand revolution
Low Flow Registration	10,000,000 10 gal/sweep hand revolution			
	1,000,000 1 ft³/sweep hand revolution			
	100,000 0.1m³/sweep hand revolution			

Materials

Meter Housing & Cover	Cast bronze (B81) or lead-free alloy
Turbo Cast Head	Cast bronze (B81) or lead-free alloy
Nose Cone & Straightening Vanes	Thermoplastic
Rotor	Thermoplastic
Rotor Radial Bearings	Lubricated thermoplastic
Rotor Thrust Bearing	Sapphire jewels
Rotor Bearing Pivots	Passivated 316 stainless steel
Calibration Mechanism	Stainless steel & thermoplastic
Measuring Chamber & Disc	Thermoplastic
High Flow Valve	Stainless steel & thermoplastic
Magnets	Ceramic
Register Lens	Glass
Register Housing & Cover	Thermoplastic or bronze
Trim	Stainless steel
Drain Plug (3/4")	Stainless steel or lead-free alloy

PHYSICAL DIMENSIONS

Compound Series Model	2" Elliptical (50 mm)	2" Round (50 mm)	3" (80 mm)	4" (100 mm)	6" (150 mm)
Meter & Pipe Size	2" (50 mm)		3" (80 mm)	4" (100 mm)	6" (150 mm)
Net Weight	45 lb (20.4 kg)		71.5 lb (32.4 kg)	85 lb (38.4 kg)	152 lb (68.7 kg)
Shipping Weight	63 lb (28.5 kg)		99.5 lb (45 kg)	120 lb (53.8 kg)	200 lb (90.4 kg)
Length (A)	15-1/4" * (387 mm)		17" (432 mm)	20" (508 mm)**	24" (610 mm)
Width (B)	7-3/8" (187 mm)		9-1/4" (235 mm)	9-1/8" (232 mm)	12-3/8" (314 mm)
Height (C)	5-7/8" (149 mm)		6-5/8" (168 mm)	7-1/4" (184 mm)	8-7/8" (225 mm)
Flange (D)	5/8" (16 mm)		3/4" (19 mm)	7/8" (22 mm)	15/16" (24 mm)
Bolt Circle (E)	4-1/2" (114 mm)	4-3/4" (121 mm)	6" (152 mm)	7-1/2" (190.5 mm)	9-1/2" (241 mm)
Centerline (C) to Base (F)	2-3/4" (70 mm)		3-5/8" (92 mm)	4-1/4" (108 mm)	5-3/8" (137 mm)
Number of Bolts	2	4	4	8	8

* Adapter available to increase total length to 17" (432 mm).
**Adapter available to increase total length to 24" (610 mm).

Elliptical Flange (2" Only)

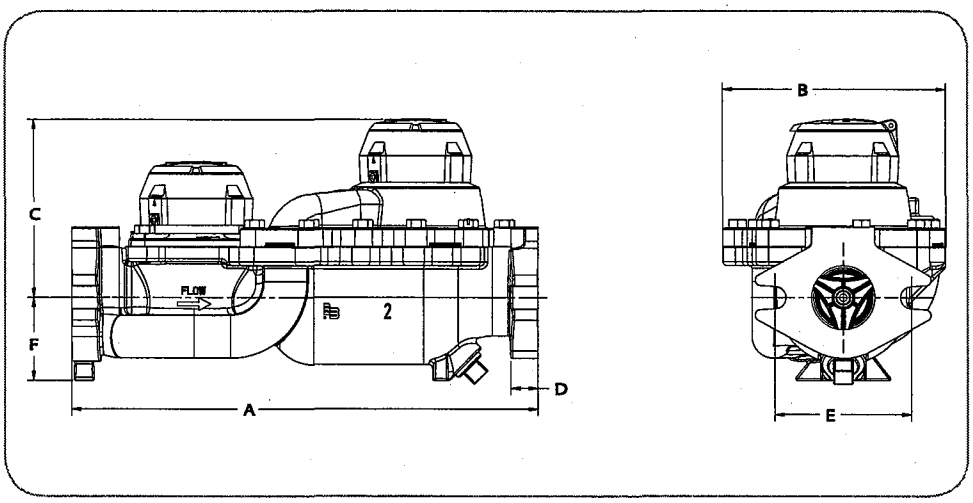

Round Flange

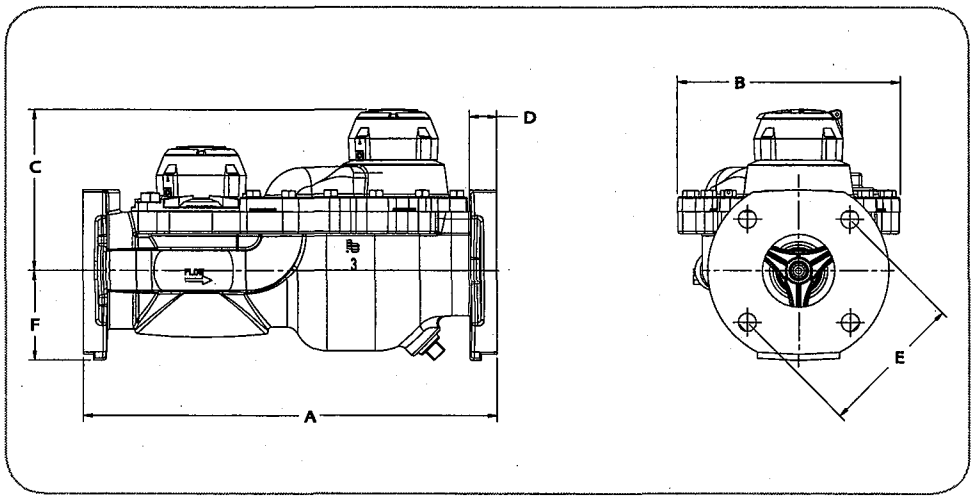

ACCURACY CHARTS

Rate of flow in gallons per minute (gpm)

2" COMPOUND SERIES METER

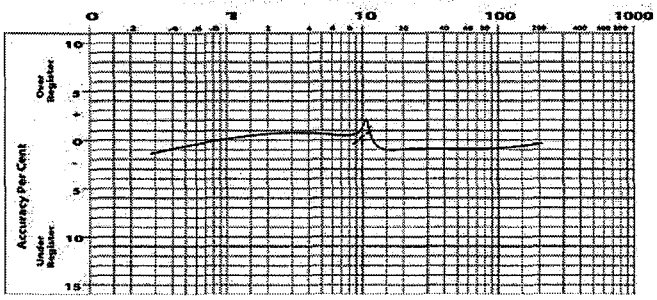

4" COMPOUND SERIES METER

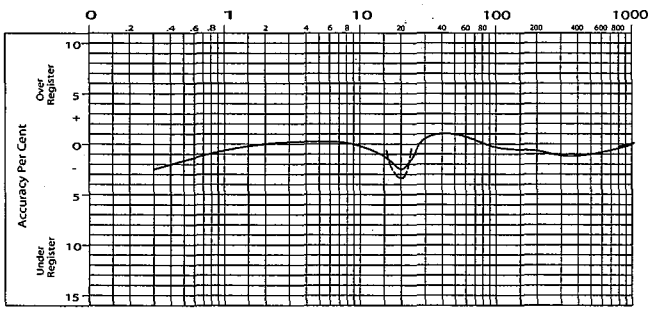

3" COMPOUND SERIES METER

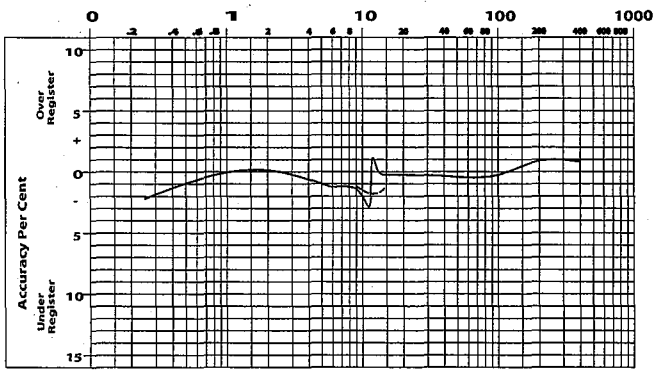

6" COMPOUND SERIES METER

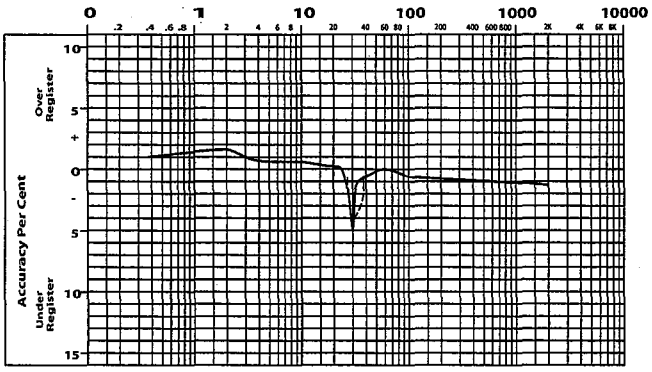

PRESSURE LOSS CHART

Rate of flow in gallons per minute (gpm)

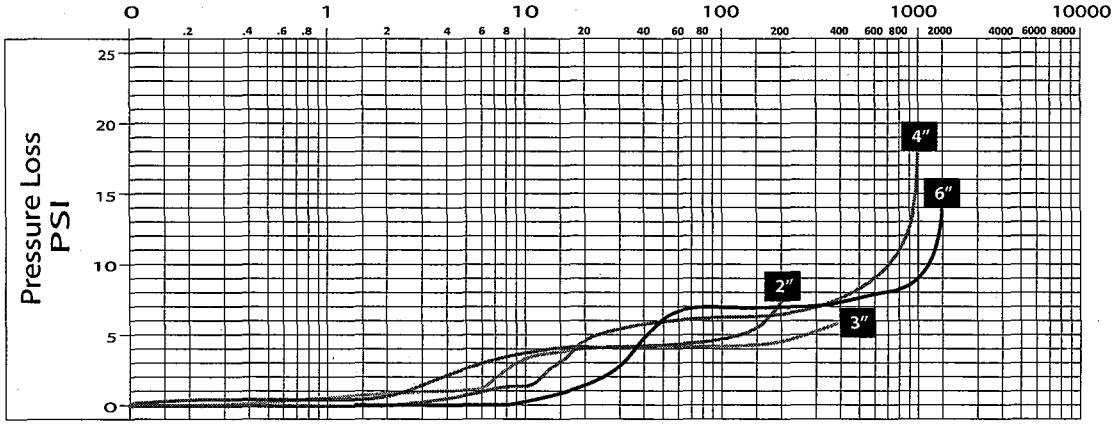

Recordall, GALAXY, and ORION are registered trademarks of Badger Meter, Inc. Other trademarks appearing in this document are the property of their respective entities.
Due to continuous research, product improvements and enhancements, Badger Meter reserves the right to change product or system specifications without notice, except to the extent an outstanding contractual obligation exists. © 2012 Badger Meter, Inc. All rights reserved.

www.badgermeter.com

The Americas | Badger Meter | 4545 West Brown Deer Rd | PO Box 245036 | Milwaukee, WI 53224-9536 | 800-876-3837 | 414-355-0400
México | Badger Meter de las Americas, S.A. de C.V. | Pedro Luis Ogazón N°32 | Esq. Angelina N°24 | Colonia Guadalupe Inn | CP 01050 | México, DF | México | +52-55-5662-0882
Europe, Middle East and Africa | Badger Meter Europa GmbH | Nurtinger Str 76 | 72639 Neuffen | Germany | +49-7025-9208-0
Czech Republic | Badger Meter Czech Republic s.r.o. | Mařikova 2082/26 | 621 00 Brno, Czech Republic | +420-5-41420411
Slovakia | Badger Meter Slovakia s.r.o. | Racianska 109/B | 831 02 Bratislava, Slovakia | +421-2-44 63 83 01
Asia Pacific | Badger Meter | 80 Marine Parade Rd | 21-04 Parkway Parade | Singapore 449269 | +65-63464836
China | Badger Meter | Rm 501, N° 11 Longyue Apartment | N° 180 Longjin Rd. Jiuting Songjiang District | Shanghai, China | 201615 | +86-21-5763 5412

Magnetoflow® Mag Meter	Model Magnetoflow Flanged	Technical Brief

GENERAL

Badger's Magnetoflow line is the result of 35 years of research and field use in electromagnetic flow meters. Based on Faraday's law of induction, these meters can measure almost any liquid, slurry or paste that has a minimum of electrical conductivity. Designed, developed and manufactured under the strictest quality standards, the Magnetoflow meter ranks among the best in the market. Its sophisticated, processor based signal conversion represents the state of the art in the industry with accuracies of 0.25% or better. The wide selection of liner and electrode materials insures maximum compatibility and minimum maintenance over a long operating period.

OPERATION

The flow meter is basically a stainless steel tube lined with a nonconductive material. Outside the tube two DC powered electromagnetic coils are positioned diametrically opposing each other. Perpendicular to these coils, two electrodes are inserted into the flow tube. When the coils are energized, a magnetic field is created across the whole diameter of the pipe. When a conductive fluid flows through this magnetic field, a voltage is induced across the electrodes. This voltage is directly proportional to the average flow velocity of the fluid and is picked up by the two electrodes. This induced voltage is then amplified and processed digitally by the converter to produce a very accurate analog or digital signal. The signal can then be used to indicate flow rate, totalization or to communicate to remote sensors and controllers. The main advantages of this technology are that with no parts in the flow stream, there is no pressure loss, the accuracy is not affected by temperature, pressure, viscosity, density or flow profile and with no moving parts there is practically no maintenance required.

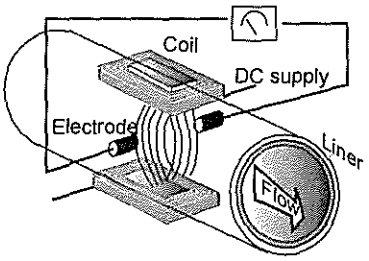

APPLICATION

Because of its inherent advantages over other more conventional technologies, this meter can be used in the majority of industrial flow applications. Whether the fluid is water or something highly corrosive, very viscous, contains a moderate amount of solids or requires special handling, this meter will be able to accurately measure it. Today Magnetoflow meters are successfully being used in most industries including food and beverage, pharmaceutical, water and wastewater, and chemical.

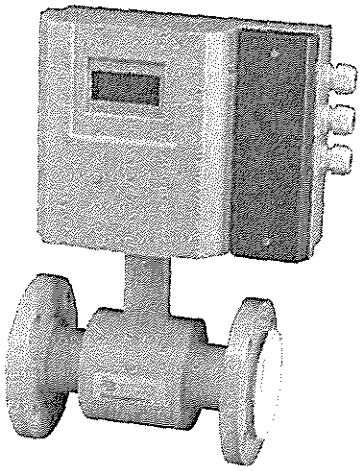

Magnetoflow® Flanged

FEATURES

- 0.25% accuracy independent of fluid viscosity, density and temperature
- Unaffected by most solids contained in fluids
- Pulsed DC magnetic field for zero point stability
- No pressure loss for low operational costs
- Long life corrosion resistant liners
- Calibrated in state of the art facilities
- Integral and remote signal converter availability
- Optional grounding rings or grounding electrode
- Measurement largely independent of flow profile
- NSF listed

Electrodes

The two measuring electrodes, when looking from the end of the meter into the inside bore, are positioned at 3 o'clock and 9 o'clock. Badger Meter's Magnetoflow Mag meters have an "Empty Pipe Detection" feature. This is accomplished by the use of a third electrode that is positioned between 12 o'clock and 1 o'clock in the meter. At any time this electrode is not covered by fluid, (for a minimum of a five second duration), the meter will display an Empty Pipe Detection condition, send out an error message if desired, and stop measuring to maintain accuracy. When the electrode again becomes covered with fluid, the error message will disappear and the meter will continue measuring.

As an option to the use of a set of grounding rings, to assure proper grounding in a given installation a grounding electrode (4th electrode) can be installed in the meter when initially fabricated. The position of this electrode is about 5 o'clock.

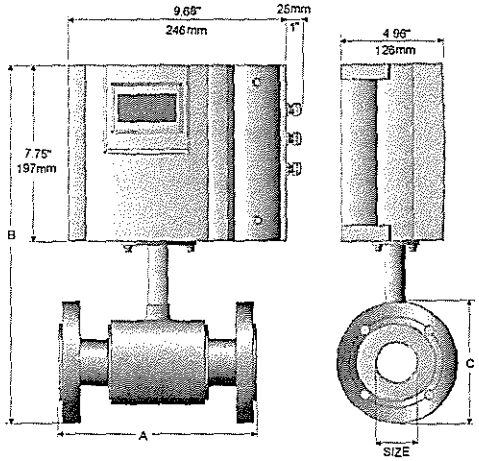

Meter with Primo® Amplifier

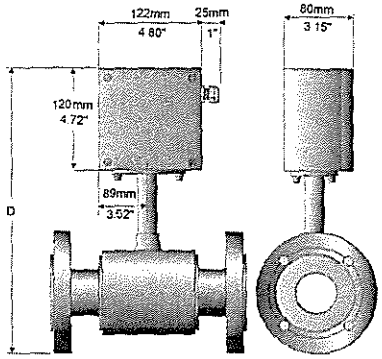

Meter with junction box for remote Primo® Amplifier

Size		A		B		C		D		Est. Weight with Primo		Flow Range LPM		Flow Range GPM	
inch	mm	inch	mm	inch	mm	inch	mm	inch	mm	Lbs	Kg	Min	Max	Min	Max
1/4	6	6.7	170	14.0	356	3.5	89	11.4	288	12	5.5	0.063	20	0.02	5
5/16	8	6.7	170	14.0	356	3.5	89	11.4	288	12	5.5	0.114	34	0.03	9
3/8	10	6.7	170	14.0	356	3.5	89	11.4	288	12	5.5	0.177	53	0.05	14
1/2	15	6.7	170	14.0	356	3.5	89	11.4	288	12	5.5	0.416	125	0.11	33
3/4	20	6.7	170	14.2	361	3.9	99	11.5	293	15	6.5	0.75	225	0.2	59
1	25	8.9	225	14.4	366	4.3	108	11.7	298	20	9.0	1.20	350	0.3	93
1 1/4	32	8.9	225	15.2	386	4.6	117	12.5	318	22	10.0	2.00	575	0.5	152
1 1/2	40	8.9	225	15.4	390	5.0	127	12.7	322	23	10.5	3.00	900	0.8	239
2	50	8.9	225	15.9	403	6.0	152	13.2	335	28	12.5	4.70	1400	1	373
2 1/2	65	11.0	280	17.1	434	7.0	178	14.4	366	54	24.5	8	2400	2	631
3	80	11.0	280	17.3	440	7.5	191	14.7	372	56	25.5	12	3600	3	956
4	100	11.0	280	18.4	466	9.0	229	15.7	398	58	26.5	19	5600	5	1493
5	125	15.8	400	19.6	498	10.0	254	16.9	430	60	27.0	30	8800	8	2334
6	150	15.8	400	20.6	524	11.0	279	17.9	456	62	28.0	40	12700	11	3361
8	200	15.8	400	22.5	572	13.5	343	20.4	518	88	40.0	75	22600	20	5975
10	250	19.7	500	26.8	681	16.0	406	24.1	613	180	82.0	120	35300	30	9336
12	300	19.7	500	28.9	734	19.0	483	26.2	666	209	95.0	170	50800	45	13444
14	350	19.7	500	30.8	782	21.0	533	28.2	716	260	118	230	69200	60	18299
16	400	23.6	590	33.7	856	23.5	597	31.0	788	308	140	300	90400	80	23901
18	450	23.6	590	35.0	890	25.0	635	32.4	822	402	182	380	114000	100	30250
20	500	23.6	590	38.2	969	27.5	699	35.5	901	495	225	470	140000	125	37346
22	550	23.6	590	39.6	1005	29.5	749	36.9	937	525	238	570	170000	150	45188
24	600	23.6	590	42.2	1071	32.0	813	39.5	1003	554	252	680	200000	180	53778
28	700	23.6	590	46.2	1173	36.5	927	44.0	1118	650	295	920	275000	240	73100
30	750	31.5	800	48.3	1228	39.0	984	45.7	1161	704	320	1060	315000	280	84000
32	800	31.5	800	52.2	1325	41.4	1015	49.5	1257	770	350	1200	361000	320	95600
36	900	31.5	800	55.3	1405	46.0	1168	54.1	1374	850	386	1500	457000	400	121000
40	1000	31.5	800	60.0	1525	50.2	1230	57.4	1457	924	420	1900	565000	500	149300
42	1050	36.0	914	66.0	1675	53.0	1346	63.4	1610	1100	500	2100	620000	550	164600
48	1200	39.4	1000	69.9	1775	59.4	1455	67.2	1707	1210	550	2700	814000	720	215100
54	1400	39.4	1000	78.5	1995	68.4	1675	75.9	1927	1364	620	3700	1100000	980	292700

SPECIFICATIONS - Detector

Flow Range: 0.1 - 39.4 fps (0.03-12 m/s)
Sizes: 1/4" to 54" (16 to 1400 mm)
Min. Conductivity: ≥ 5 micromhos/cm
Accuracy:
± 0.25% accuracy of rate from 1-39.4 fps.
± 0.5% accuracy of rate from 0.1-1.0 fps.
Electrode Materials: Standard: Alloy C
Optional: 316 Stainless Steel, Gold/Platinum Plated, Tantalum, Platinum/Rhodium
Liner Material: PFA up to 3/8", PTFE 1/2" thru 24", Soft and Hard Rubber from 1" to 54", Halar® from 14" to 40"
NSF Listed: Models with Hard Rubber Liner 4" size and up; PTFE Liner - All sizes.
"Only products bearing the NSF Mark are Certified."

Fluid Temperature:
With Remote Converter:
PFA, PTFE & Halar 311°F, (155°C)
Rubber 178°F, (80°C)
With Meter Mounted Converter:
PFA, PTFE & Halar 212°F, (100°C)
Rubber 178°F, (80°C)
Pressure Limits:
150 psi (10Bar) optional 300psi (20Bar)
Coil Power: Pulsed DC
Ambient Temperature: -4°F to 140°F, (-20°C to 60°C)
Pipe Spool Material: 316 Stainless Steel
Meter Housing Material: Carbon Steel welded

Flanges: Carbon Steel - Standard (ANSI B16.5 Class 150 RF) 316 Stainless Steel - Optional
Meter Enclosure Classification: Nema 4
Optional: Submersible Nema 6P (Remote Amplifier Required)
Junction Box Enclosure Protection:
(For Remote Converter Option) Powder coated die-cast aluminum, Nema 4
Cable Entries: 1/2" NPT Cord Grip
Optional Stainless Steel Grounding Rings:

Meter Size	Thickness (of one ring)
up thru 10"	.135"
12" to 20"	.187"

Magnetoflow® and Primo® are registered trademarks of Badger Meter, Inc.
Halar® is a registered trademark of Ausimont U.S.A., Inc.

Due to continuous research, product improvements and enhancements, Badger Meter reserves the right to change product or system specifications without notice, except to the extent an outstanding contractual obligation exists.

Please see our website at
www.badgermeter.com
for specific contacts.

BadgerMeter, Inc.
P.O. Box 245036, Milwaukee, WI 53224-9536
Telephone: (414) 355-0400 / (877) 243-1010
Fax: (414) 355-7499 / (866) 613-9305
www.badgermeter.com

Copyright © Badger Meter, Inc. 2006. All rights reserved.

Attachment 4

Solano County Smart Irrigation Controller Rebate Program

Guidelines for program participation

- Be a water customer in Solano County, have a water service account that has been active for at least twelve months, and use potable water for irrigation. Properties using recycled water or well water do not qualify.
- Landscape must consist of at least 1,000 square feet but not more than one acre of automatically irrigated area and at least four active stations.
- Customer must agree to a free pre- and post-installation landscape water survey in order to participate in the Smart Irrigation Controller Rebate Program. Please call 800-366-6995 prior to installation of your Smart Irrigation Controller to qualify for a rebate.
- Existing irrigation system must be well-maintained and in good working order prior to participation.
- New construction does not qualify.
- Only Smart Irrigation Controllers tested under the Irrigation Association's Smart Water Application Technologies protocol ("SWAT-tested") qualify for the rebate. For more information please consult the List of approved Irrigation Controllers (pdf), or go to the Water Save a Buck Program page from Metropolitan Water District of Southern California.
- Each Smart Irrigation Controller must replace an existing traditional irrigation timer.
- Customer must install and program controller per manufacturer's directions and, if applicable, pay the service fee for a minimum of two years after installation date. Customer must agree to release pre- and post-installation water use records for program statistical purposes.
- Water Agency will pay each qualifying water account customer a rebate of 50% of the cost of the SMART irrigation controller UP TO:
  1. $300 for a controller with 4-12 stations,
  2. $700 for a controller with 13-24 stations,
  3. $1,000 for a controller with 25 or more stations.
- This program is for residential and commercial customers.

Note:

Rebates are one-time-only per site, and will be provided on a first-come, first-served basis. Rebates offered are subject to availability of funds. This rebate program may end at any time. SCWA reserves the right to deny any application that does not meet all requirements outlined above. Due to variables beyond the control of SCWA, the Agency cannot guarantee the installation of 'Smart' irrigation timer(s) will result in a lower utility bill. Applicant waives and releases SCWA, participating water utilities, and their contractors or agents from any and all claims and causes of action arising out of the installation and use of this product. SCWA is not responsible for any damage that may occur to participants' property as a result of the program.

Program Information

Useful links

- Back to Main
- List of approved Irrigation Controllers (pdf).
- Program participation guidelines
- Rebate Application (pdf).

Program Sponsored by:

SOLANO WATER

Customer Service

© 2011 WaterPrograms.com by ConserVision Consulting. All Rights Reserved.

Attachment 5

HALCYON SOLAR CONSTRUCTION
19712 Wayne Lane
Cottonwood, CA 96022
530 347-9756
www.halcyonsolar.com

Bella Vista Water District

System Size KW:	515kW
System Size Square Feet Approximately:	37,713
System Size in Acres Approximately:	2 Acres
Total estimated system cost:	$2,056,880
Annual kWh Usage:	956,357kWh
Estimated Solar Production:	775,691kWh
Annual kWh offset %:	81%
Annual Electric Bill:	$193,668
Annual Electric Bill with Solar:	$3,144
Savings and % of Bill offset:	$190,524 or 98%
Annual Bill in 13 years without Solar 6.7% a year increase:	$421,726
Estimated Saving over 25 years:	$3,574,876

Environmental Benefits (Over 25 years)

CO_2 Offset:	16,650 tons
NO_x (which creates smog)	106,864 lbs
SO_2 (which causes acid rain)	96,738 lbs

This is the equivalent of 54,183,944 miles driven in an average car, or 2,167358 miles per year.

Attachment 6

Environmental Conservation Online System
Conserving the Nature of America
Enter Search Term(s):

Search

- ECOS>
- Species Profile for Chinook salmon (Oncorhynchus tshawytscha)

Chinook salmon (Oncorhynchus tshawytscha)

Federal Register | Recovery | Critical Habitat | Conservation Plans | Petitions | Life History

Search for images on digitalmedia.fws.gov

Taxonomy: View taxonomy in ITIS

Listing Status: Endangered and Threatened

Population detail

The FWS is currently monitoring the following populations of the Chinook salmon

Map of Species occurrence
For the best experience, make sure that javascript is enabled and that you have the Adobe Flash Player installed Click here to download and install the Flash Player

- **Population location:** Sacramento River winter-run ESU - See 50 CFR 224.101

  Listing status: Endangered

  - **States/US Territories** in which this population is known to or is believed to occur: California
  - **US Counties** in which this population is known to or is believed to occur: View All
  - **USFWS Refuges** in which this population is known to occur: NORTH CENTRAL VALLEY WILDLIFE MANAGEMENT AREA, SACRAMENTO RIVER NATIONAL WILDLIFE REFUGE, SUTTER NATIONAL WILDLIFE REFUGE

- **Population location:** Upper Columbia River spring-run ESU — See 50 CFR 224.101

  Listing status: Endangered

  - **States/US Territories** in which this population is known to or is believed to occur: Washington
  - **US Counties** in which this population is known to or is believed to occur: View All

- **Population location:** Lower Columbia River ESU — See 50 CFR 223.102

  Listing status: Threatened

  - **States/US Territories** in which this population is known to or is believed to occur: Oregon , Washington
  - **US Counties** in which this population is known to or is believed to occur: View All

- **Population location:** California Coastal ESU - See 50 CFR 223.102

  Listing status: Threatened

  - **States/US Territories** in which this population is known to or is believed to occur: California
  - **US Counties** in which this population is known to or is believed to occur: View All

- **Population location:** Central Valley spring-run ESU — See 50 CFR 223.102

  Listing status: Threatened

  - **States/US Territories** in which this population is known to or is believed to occur: California
  - **US Counties** in which this population is known to or is believed to occur: View All
  - **USFWS Refuges** in which this population is known to occur: BUTTE SINK NATIONAL WILDLIFE REFUGE, SACRAMENTO RIVER NATIONAL WILDLIFE REFUGE,

SUTTER NATIONAL WILDLIFE REFUGE, WILLOW CREEK-LURLINE WILDLIFE MANAGEMENT AREA

- **Population location:** Puget Sound ESU — See 50 CFR 223.102

  Listing status: Threatened

  - **States/US Territories** in which this population is known to or is believed to occur: Washington
  - **US Counties** in which this population is known to or is believed to occur: View All

- **Population location:** Snake River fall-run ESU — See 50 CFR 223.102

  Listing status: Threatened

  - **States/US Territories** in which this population is known to or is believed to occur: Oregon , Washington
  - **US Counties** in which this population is known to or is believed to occur: View All

- **Population location:** Snake River spring/summer-run ESU — See 50 CFR 223.102

  Listing status: Threatened

  - **States/US Territories** in which this population is known to or is believed to occur: Oregon , Washington
  - **US Counties** in which this population is known to or is believed to occur: View All

- **Population location:** Upper Willamette River ESU — See 50 CFR 223.102

  Listing status: Threatened

  - **States/US Territories** in which this population is known to or is believed to occur: Oregon
  - **US Counties** in which this population is known to or is believed to occur: View All

Current Listing Status Summary

Status	Date Listed	Lead Region	Where Listed
Endangered	04/06/1990	National Marine Fisheries Service (Region 11)	Sacramento River winter-run ESU
Endangered	08/02/1999	National Marine Fisheries Service (Region 11)	Upper Columbia spring-run ESU
Threatened	08/02/1999	National Marine Fisheries Service (Region 11)	Lower Columbia River ESU
Threatened	12/29/1999	National Marine Fisheries Service (Region 11)	California Coastal ESU
Threatened	12/29/1999	National Marine Fisheries Service (Region 11)	Central Valley spring-run ESU
Threatened	08/02/1999	National Marine Fisheries Service (Region 11)	Puget Sound ESU

Threatened	04/22/1992	National Marine Fisheries Service (Region 11)	Snake River fall-run ESU
Threatened	04/22/1992	National Marine Fisheries Service (Region 11)	Snake River spring/summer-run ESU
Threatened	08/02/1999	National Marine Fisheries Service (Region 11)	Upper Willamette River ESU

» Federal Register Documents

Most Recent Federal Register Documents (Showing 5 of 42: view all)

Date	Citation Page	Title
09-04-2014	79 FR 52576 52578	Adding 10 Species to the List of Endangered and Threatened Wildlife
07-23-2014	79 FR 42687 42696	Marine and Anadromous Taxa: Additions, Removal, Updates,and Corrections to the List of Endangered and Threatened Wildlife
03-05-2008	73 FR 11870 11871	Availability of a Draft Environmental Assessment/Habitat Conservation Plan, and Receipt of Applications for Incidental Take Permits from the Broughton Land Company, Columbia County, Washington
09-26-2006	71 FR 56107 56107	Notice of Availability of a Final Record of Decision on the Issuance of Permits
09-02-2005	70 FR 52488 52627	Designation of Critical Habitat for Seven Evolutionarily Significant Units of Pacific Salmon and Steelhead in California

Most Recent Special Rule Publications (Showing 2 of 2)

Date	Citation Page	Title
07-10-2000	65 FR 42422 42481	Endangered and Threatened Species; Final Rule Governing Take of 14 Threatened Salmon and Steelhead Evolutionarily Significant Units (ESUs)
01-03-2000	65 FR 170 196	Proposed Rule Governing Take of Seven Threatened Evolutionarily Significant Units (ESUs); Proposed Rule

» Recovery

- Recovery Plan Information Search
- Information Search FAQs

No recovery information is available for the Chinook salmon.

» Critical Habitat

Current Critical Habitat Documents (Showing 5 of 10: view all)

Date	Citation Page	Title	Document Type	Status
09/02/2005	70 FR 52488 52627	Designation of Critical Habitat for Seven Evolutionarily Significant Units of Pacific Salmon and Steelhead in California	Final Rule	Final designated
02/16/2000	65 FR 7764 7787	(NOAA/NMFS) Designated Critical Habitat: Critical Habitat for 19 Evolutionarily Significant Units of Salmon and Steelhead in Washington, Oregon, Idaho, and California	Final Rule	Final designated
10/25/1999	64 FR 57399 57403	Designated Critical Habitat: Revision of Critical Habitat for Snake River Spring/Summer Chinook Salmon	Final Rule	Final designated
03/23/1999	64 FR 14052 14077	(NOAA/NMFS) Endangered and Threatened Species; Regulations Consolidation; Final Rule	Final Rule	Final designated
12/28/1993	58 FR 68543 68554	Designated Critical Habitat; Snake River Sockeye Salmon, Snake River Spring/Summer Chinook Salmon, and Snake River Fall Chinook Salmon	Final Rule	Not Required

To learn more about critical habitat please see http://ecos.fws.gov/crithab

» Conservation Plans

Habitat Conservation Plans (HCP) (learn more) (Showing 5 of 7: view all)

HCP Plan Summaries

Broughton Land Company
Cedar River Watershed HCP
City of Kent Clark Springs Water Supply
City of Tacoma, Tacoma Water HCP
Simpson Timber NW Operations (Green Diamond Resource Company)

» Petitions

Most Recent Petition Findings (Showing 1 of 1)

Date	Citation Page	Title	Finding
02/27/1987	52 FR 6041 6048	Notice of Finding Determination of Winter Run Chinook Salmon as End. not Warranted at This Time; 52 FR 6041-6048	• Notice 12 month petition finding, Not warranted

» Life History

No Life History information has been entered into this system for this species.

» Other Resources

NatureServe Explorer Species Reports -- NatureServe Explorer is a source for authoritative conservation information on more than 50,000 plants, animals and ecological communtities of the U.S and Canada. NatureServe Explorer provides in-depth information on rare and endangered species, but includes common plants and animals too. NatureServe Explorer is a product of NatureServe in collaboration with the Natural Heritage Network.

ITIS Reports -- ITIS (the Integrated Taxonomic Information System) is a source for authoritative taxonomic information on plants, animals, fungi, and microbes of North America and the world.

FWS Digital Media Library -- The U.S. Fish and Wildlife Service's National Digital Library is a searchable collection of selected images, historical artifacts, audio clips, publications, and video.

ECOS Home | About ECOS | Contact Us
U.S. Fish and Wildlife Service Home Page | Department of the Interior | USA.gov | About the U.S. Fish and Wildlife Service | Accessibility | Privacy | Notices | Disclaimer | FOIA

Attachment 7

UC San Diego

UC San Diego News Center

August 01, 2013 | By Ioana Patringenaru

Cleaning Solar Panels Often Not Worth the Cost, Engineers at UC San Diego Find

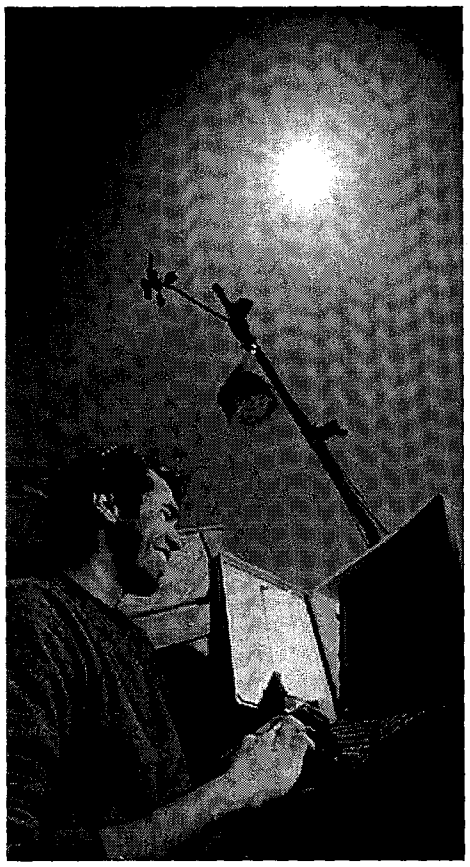

1. Photos by Erik Jepsen/UC San Diego Publications

Don't hire someone to wash your dirty solar panels. That's the conclusion of a study recently conducted by a team of engineers at the University of California, San Diego. Their findings were published in the July 25 online issue of Solar Energy.

Researchers found panels that hadn't been cleaned, or rained on, for 145 days during a summer drought in California, lost only 7.4 percent of their efficiency. Overall, for a typical residential solar system of 5 kilowatts, washing panels halfway through the summer would translate into a mere $20 gain in electricity production until the summer drought ends—in about 2 ½ months. For larger commercial rooftop systems, the financial losses are bigger but still rarely enough to warrant the cost of washing the panels. On average, panels lost a little less than 0.05 percent of their overall efficiency per day.

"You definitely wouldn't get your money back after hiring someone to wash your rooftop panels," said Jan Kleissl, the principal investigator on the study and a professor of mechanical and aerospace engineering at UC San Diego.

He cautions that the study is focused on smaller systems. For very large installations, economies of scale may mean that washing panels is worth it.

The researchers analyzed data from the California Solar Initiative showing solar panel output at 186 residential and commercial sites from the San Francisco Bay Area to the United States-Mexico border for the year 2010. They compared output after more than 0.1 inches of rain fell on the panels with output during the 145-day summer drought California experienced that year. The panels would have been cleaned by rain but would have remained dirty during the drought, researchers reasoned.

"Dust on PV panels does make a difference but it's not a big enough factor in California to warrant

cleaning," said Felipe Mejia, the first author on the study and a graduate student in environmental engineering in Kleissl's research group at the Jacobs School of Engineering at UC San Diego.

The survey's findings are applicable more widely, Kleissl said. Pollution and dust levels in California are fairly representative of the rest of the United States—and possibly higher, he explained. If anything, other areas of the country get more rain, resulting in cleaner panels and even smaller losses.

"Of course, there are exceptional events, like dust storms in Arizona," Kleissl said.

Researchers believe that this is the largest survey quantifying losses of electricity output due to dirty solar panels conducted so far. Typically, particulate matter from air pollution, agriculture, construction and traffic accumulates on the panels, as well as pollen and sea salt.

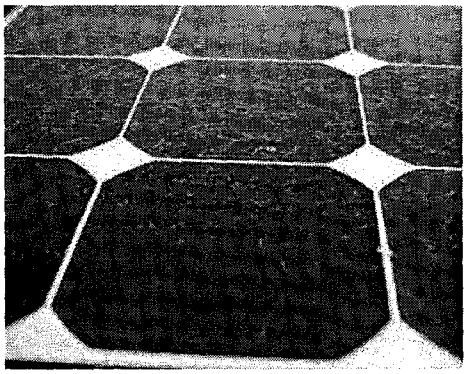
Solar panels

Researchers also found that solar panels mounted at an angle of less than five degrees caused bigger losses in efficiency. That's because dirt slips off panels that are installed at a steeper angle. Engineers also didn't find any statistically significant differences between different regions of the state for output during the drought period, although sites in the Los Angeles basin and the Central Valley had dirtier panels.

But solar panels heavily soiled with bird droppings should be cleaned. That's because the droppings essentially block all sunlight and will not be washed away when it rains. Engineers also found that at a few sites, photovoltaic panels were dirty enough to warrant cleaning due to very specific and localized circumstances. For example, being directly next to and downwind of a highway, factory or agricultural field may generate enough dirt to warrant cleaning.

Sites in the survey were part of the California Solar Initiative, a state-funded rebate program for customers of Pacific Gas and Electric, Southern California Edison and San Diego Gas and Electric. The California Public Utilities Commission RD&D program also funded the research.

Next steps in the research would be looking more closely at the sites that did warrant cleaning and determine what caused the panels to get so dirty. Finally, researchers could add collectors at specific sites to determine what kind of dirt accumulates on the solar panels; whether special materials could keep dirt from accumulating; and whether special, less costly washing systems would do a better job at removing dirt from the panels.